SAILOR

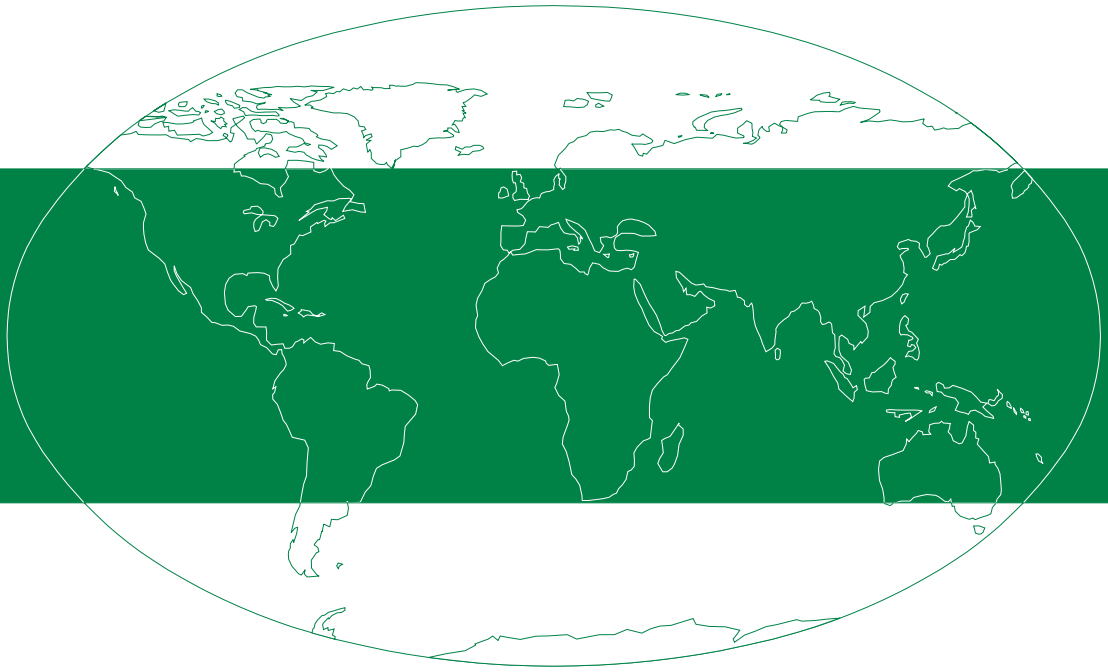

TECHNICAL MANUAL
FOR
COMPACT VHF RT2047/D

S.P. RADIO A/S · AALBORG · DENMARK

SAILOR

SAILOR ® · Porsvej 2 · PO Box 7071 · DK-9200 Aalborg SV · Denmark
Phone: +45 9634 6100 · Fax: +45 9634 6101 · Telex: 69789 ECI DK
E-mail: sailor@sailor.dk · Web: www.sailor.dk

CONTENTS

CONTENTS

CONTENTS

1 GENERAL INFORMATION

1.1 INTRODUCTION

The RT2047 VHF Radiotelephone has been designed to be used with the Compact 2000 Module Programme.

The VHF RT2047 can either be installed and operated as an independent unit or in combination with the other modules in the Compact 2000 programme. These modules include a complete range of SSB transmitters and receivers, MF/HF Digital Selective Calling unit and/or radiotelex equipment, a scrambler that ensures complete communication secrecy and a VHF Digital Selective Call (DSC) unit. The DSC-unit features direct dialling and reception of ship to shore, shore to ship and ship to ship calls as well as automatic distress calls etc.

The VHF RT2047 has been constructed to withstand the most extreme conditions experienced in small, semi-open boats. Its compact, weather proof construction ensures a degree of resistance to sea spray. The printed circuits, which have made possible a combination of compactness and exceptional performance, are coated with a special, moisture-repellent lacquer.

In the design of this VHF radiotelephone, S. P. Radio have taken into account all conditions it will be exposed to in day-to-day operation. However, even a product of this high quality requires regular service and maintenance, and we recommend the user to observe the maintainence instructions in the instruction book.

S. P. Radio is Europe's leading producer of maritime radio communication equipment - a position which has been maintained by means of constant and extensive product development. We have a world-wide network of dealers with general agencies in fifty countries. All our dealers are well-trained and will be able to service all products.

CONTENTS

2 INSTALLATION

2.1 INSTALLATION HINTS

Before installation of a VHF RT2047 the following points must be observed:

WHAT FACILITIES WILL HAVE TO BE ENABLED ?
Selcall, private channels, US-mode, dual watch, scanning facilities, etc. The procedure for enabling these facilities is described in the manual: INSTRUCTIONS FOR IDENTITY AND SERVICE PROGRAMMING OF VHF RT2047. This manual will only be delivered to dealers and general agents where it will be at the disposal of trained personal in their service facilities.

IN WHAT WAY TO INSTALL THE VHF RT2047 ?
In section 2.2. MOUNTING POSSIBILITIES there's installation instructions for the VHF RT2047 as an independent unit or in combination with other units in the Compact 2000 programme.

HANDSET.
Installation of handset, see section 2.4. HANDSET.

EXTERNAL LOUDSPEAKER.
An external loudspeaker 4-8 ohm (4 W) can be connected to the power connector J802 pin 1 and 6, see section 2.7. POWER CONNECTOR + EXT. LOUDSPEAKER.

SPECIAL OPTIONS:
The signals 'remote alarm for selcall', 'AF to information decoder', 'AUX I' , 'AUX II' etc. are available, see section 2.9. SPECIAL OPTIONS.

2.2 MOUNTING POSSIBILITIES

TABLETOP AND DECKHEAD

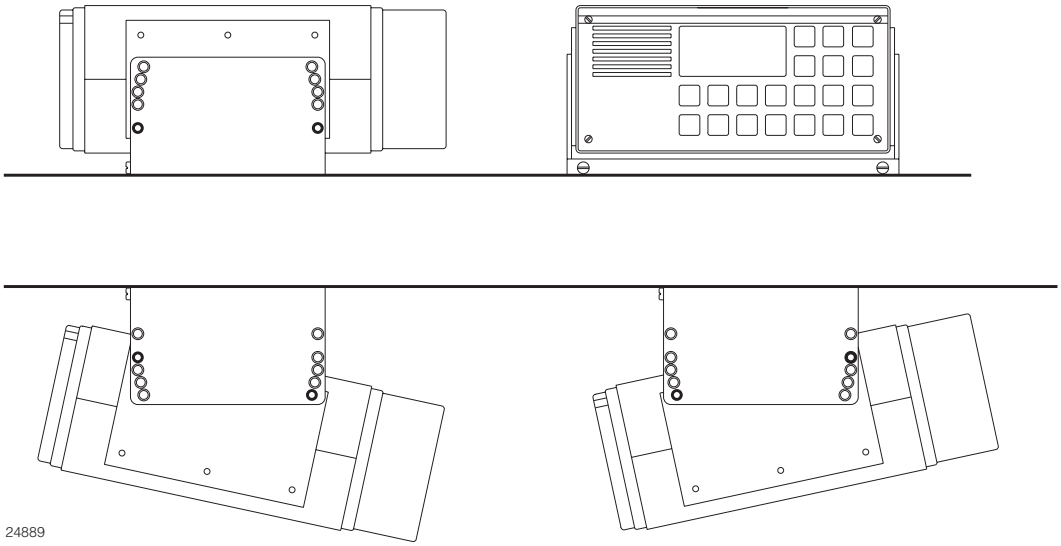

Mounting bracket H2055

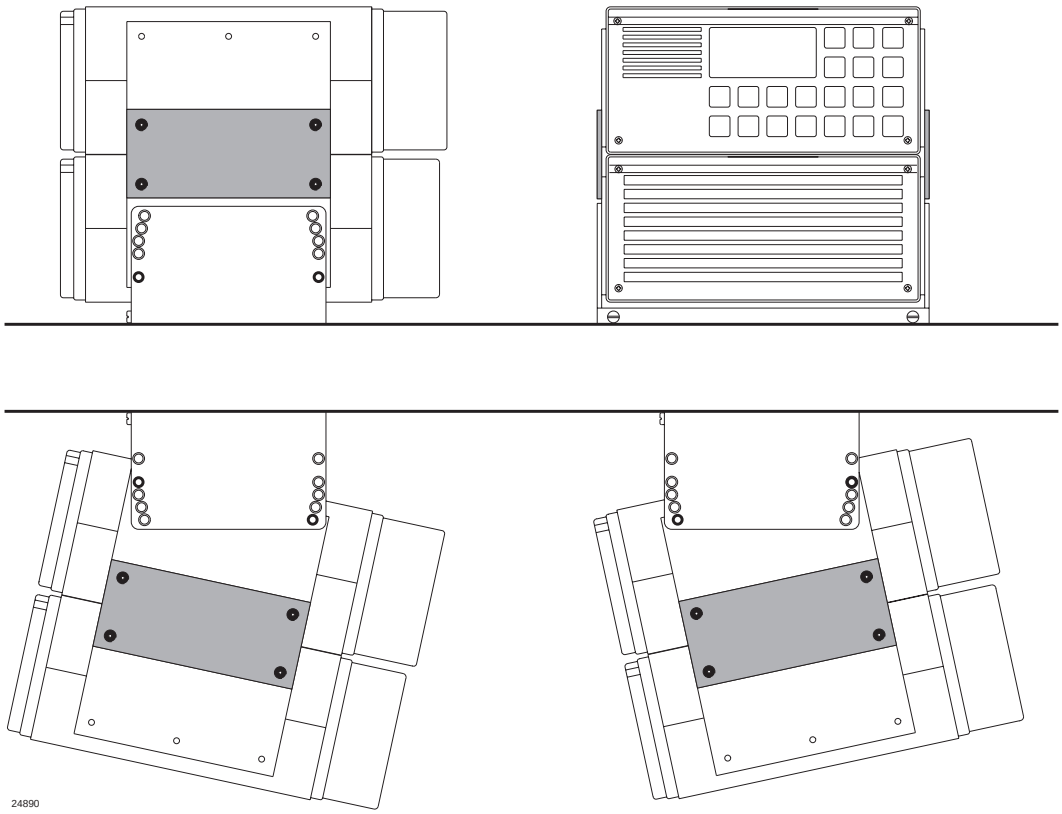

Mounting kit H2068 and H2055

BULKHEAD AND CONSOLE

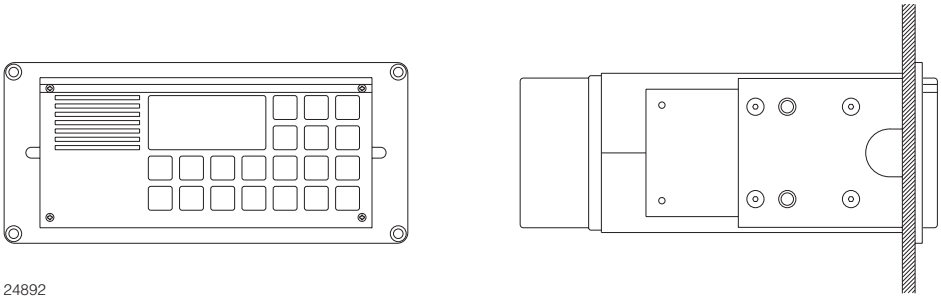

24892

Mounting kit H2063

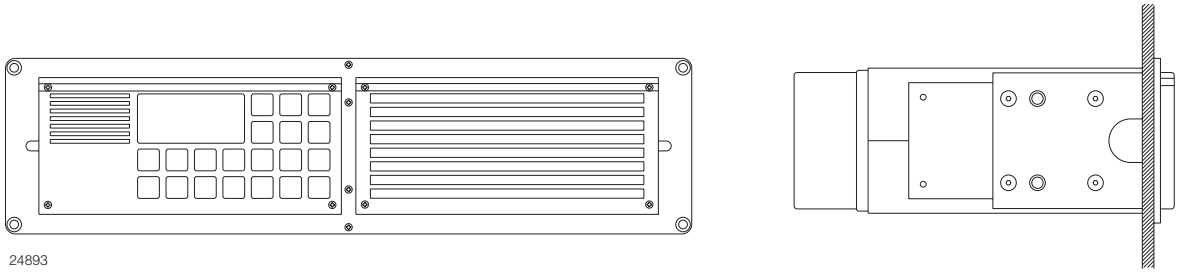

24893

Mounting kit H2062

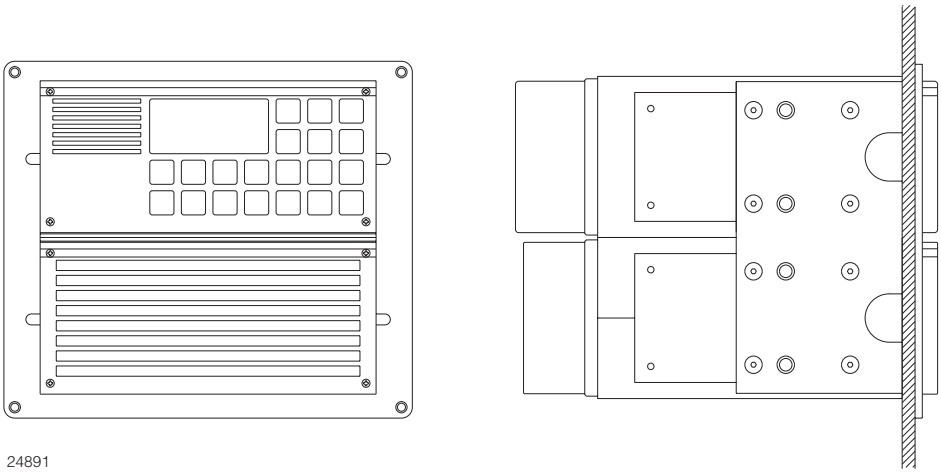

24891

Mounting kit H2064

IN CONJUNCTION WITH OTHER “S.P. RADIO” EQUIPMENT.
Look up the INSTALLATION section for the S.P. RADIO unit in question.

2.3 DIMENSIONS AND DRILLING PLAN

UNIVERSAL MOUNTING BRACKET H2055

Permits a wide variety of installation possibilities, such as table top, bulkhead or deck head installation. Fur other possibilities such as console installation, installation with 19" rack or assembly of all units in the Compact programme on the bulkhead, see special information concerning installation of the Compact programme.

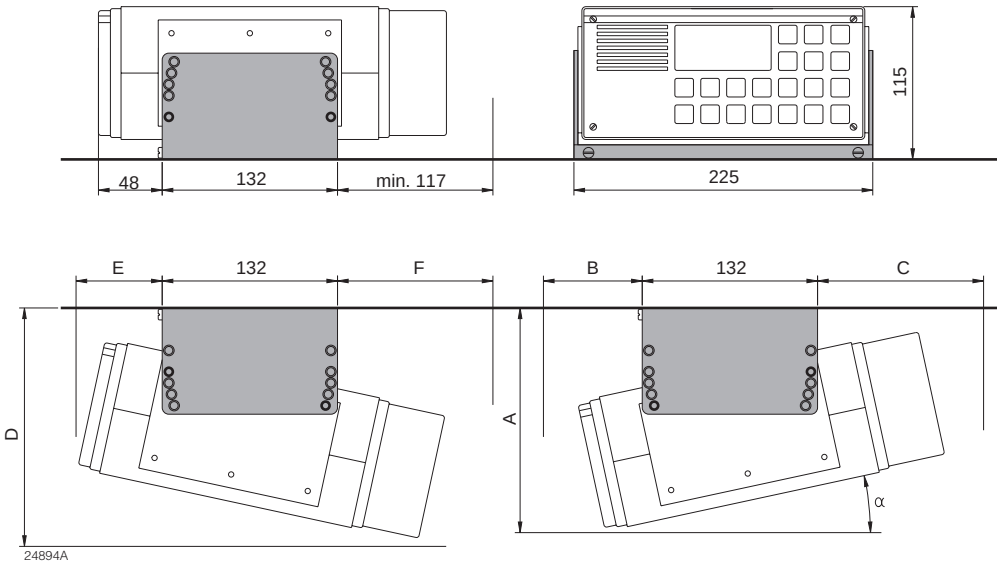

α	A	B	C	D	E	F
0°	130	48	117	130	48	117
4.8°	142	48	117	146	53	117
9.6°	155	48	118	163	59	116
14.4°	167	45	133	178	65	113

Dimensions in mm.

WEIGHT

Mounting kit H2055	: 1.5 kg
H2054	: 5.5 kg
H2074	: 4.0 kg
CRY2001	: 3.2 kg
RT2047	: 5.2 kg

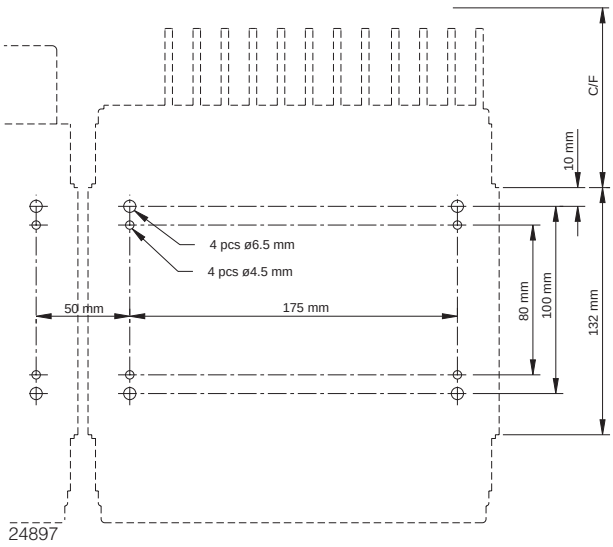

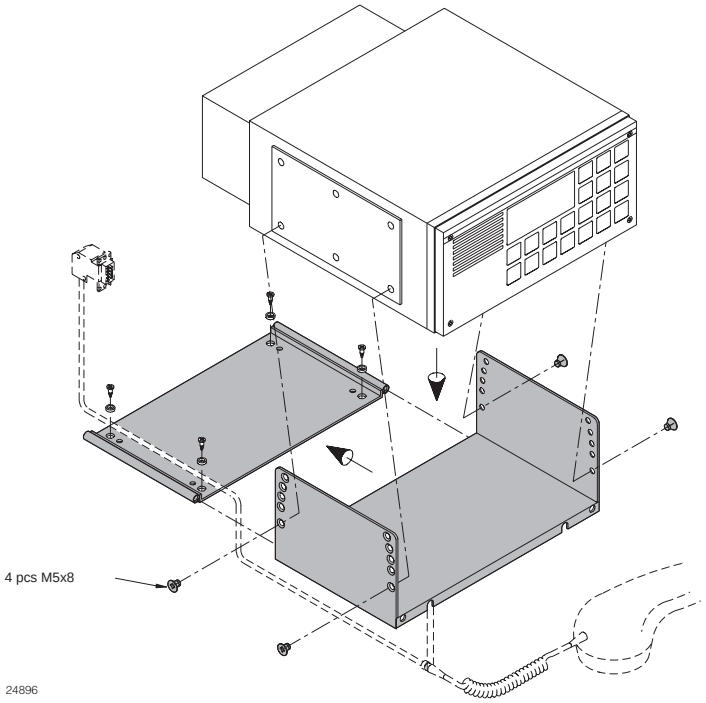

Mounting kit H2068 and H2055

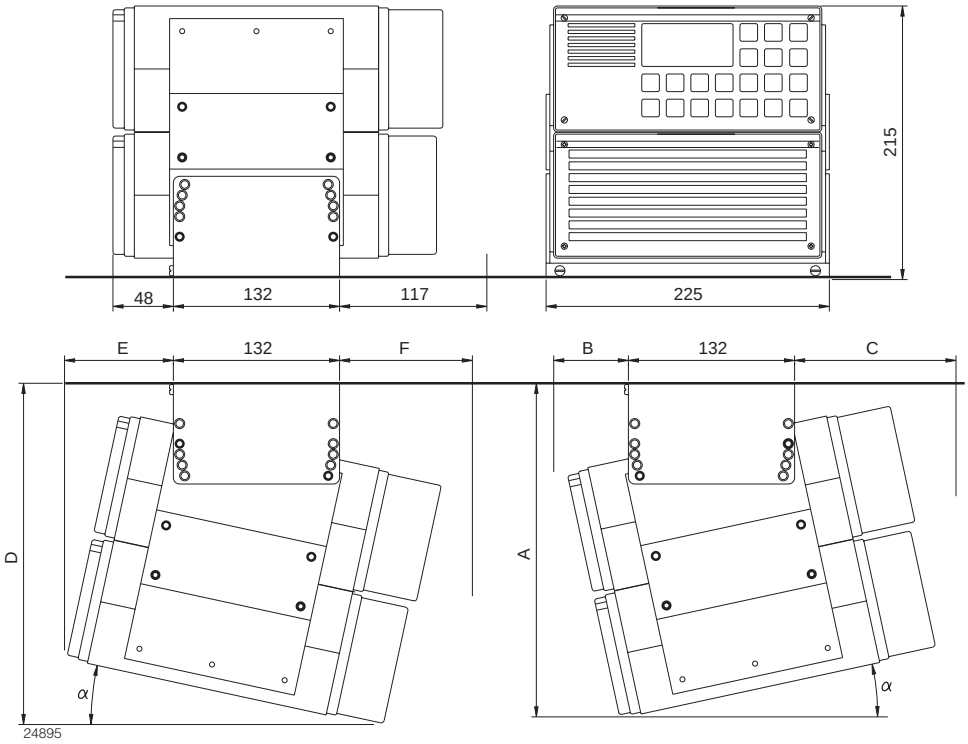

α	A	B	C	D	E	F
0°	230	67	117	230	67	117
4.8°	243	67	129	245	72	117
9.6°	255	65	142	262	78	115
14.4°	265	62	155	270	89	112

Dimensions in mm.

WEIGHT

Mounting kit H2068 and H2055	: 1.5 kg
H2054	: 5.5 kg
H2074	: 4.0 kg
CRY2001	: 3.2 kg
RT2047	: 5.2 kg

Mounting kit H2063

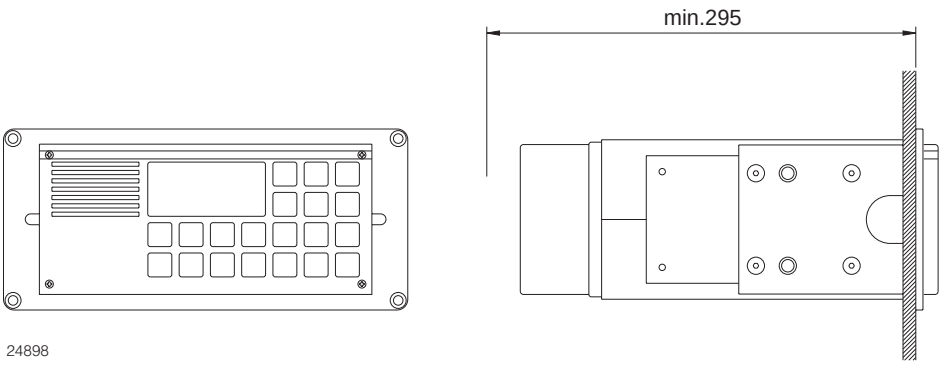

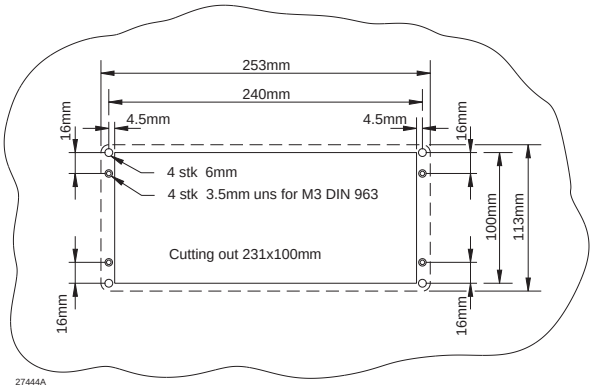

Free distance must be kept to allow free air circulation ambient temperature max. 40°C.

WEIGHT

Mounting kit H2063	: 1.0 kg
H2054	: 5.5 kg
H2074	: 4.0 kg
CRY2001	: 3.2 kg
RT2047	: 5.2 kg

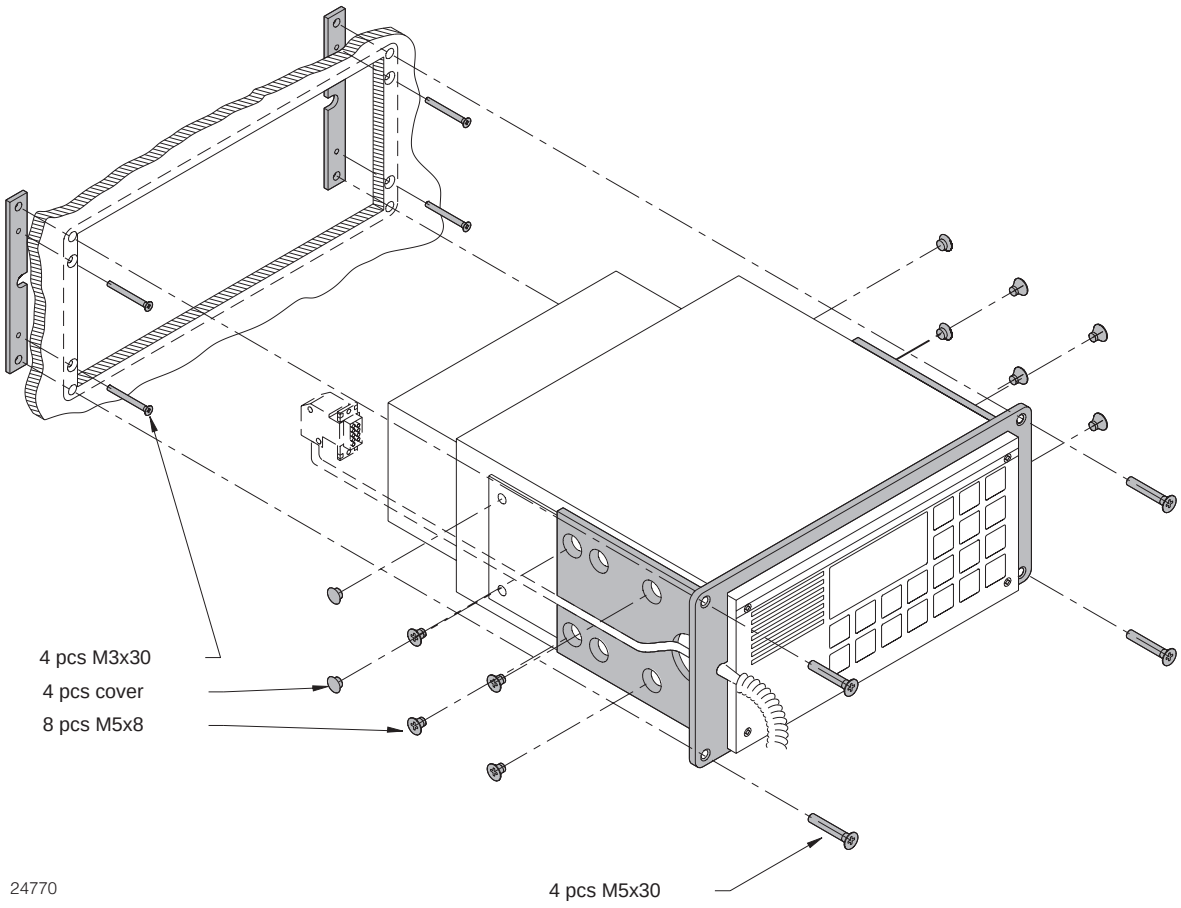

Mounting kit H2064

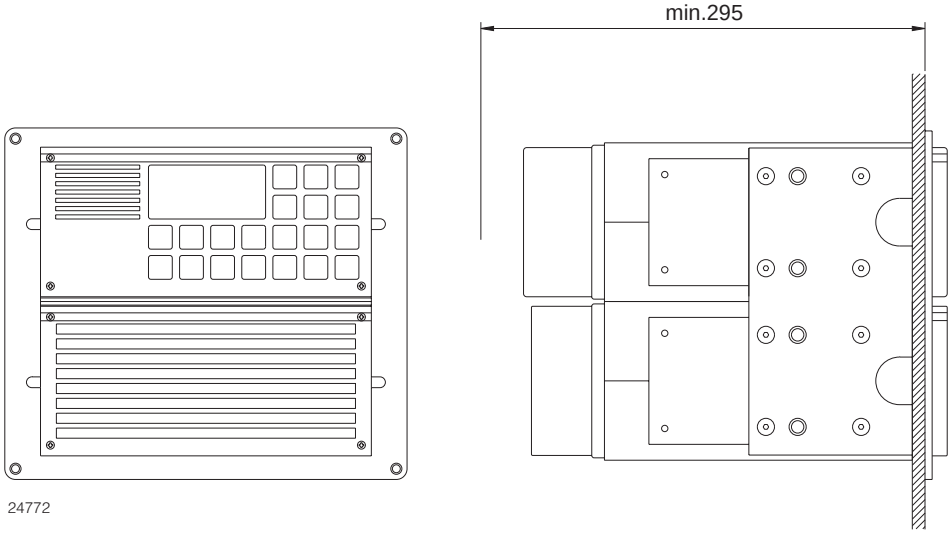

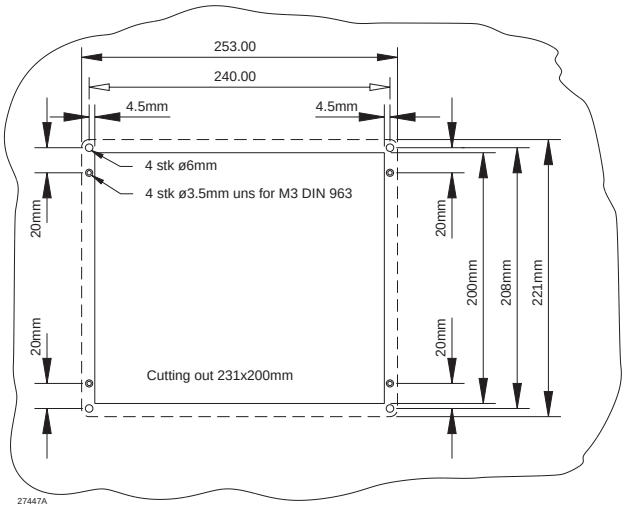

Free distance must be kept to allow free air circulation ambient temperature max. 40°C.

WEIGHT

Mounting kit H2064	: 1.5 kg
H2054	: 5.5 kg
H2074	: 4.0 kg
CRY2001	: 3.2 kg
RT2047	: 5.2 kg

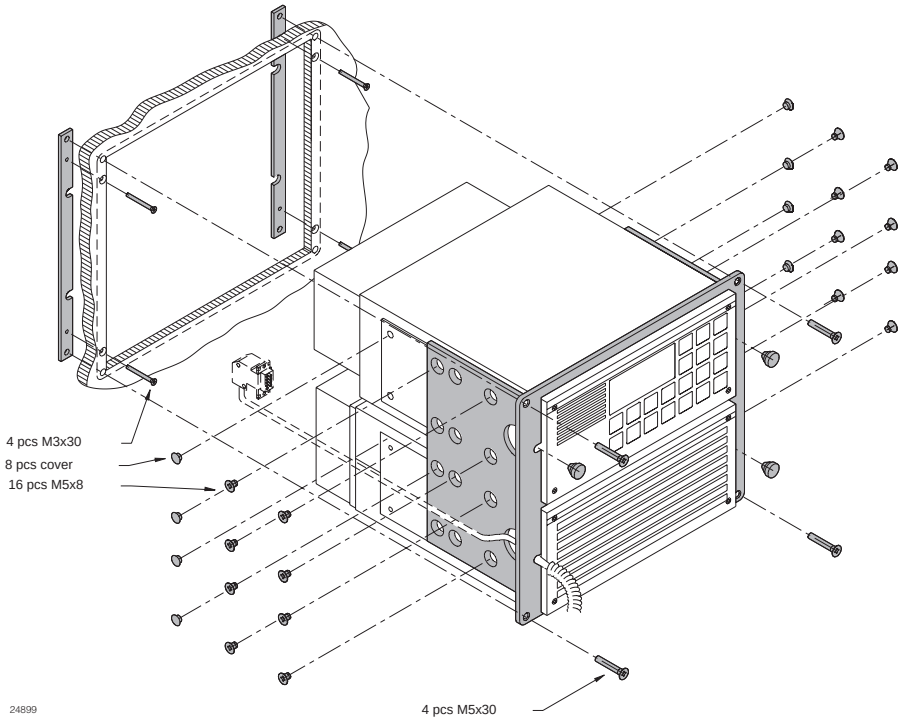

Mounting kit H2062

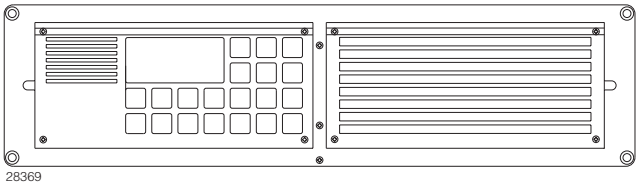

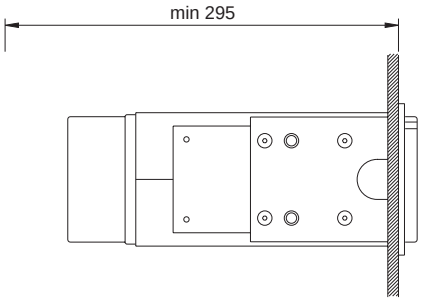

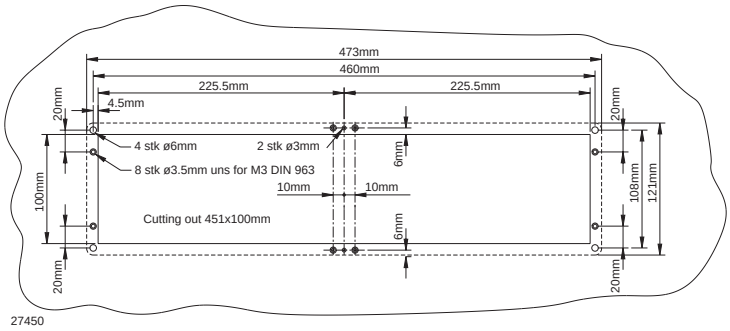

Free distance must be kept to allow free air circulation ambient temperature max. 40°C.

WEIGHT

Mounting kit H2062	: 1.5 kg
H2054	: 5.5 kg
H2074	: 4.0 kg
CRY2001	: 3.2 kg
RT2047	: 5.2 kg

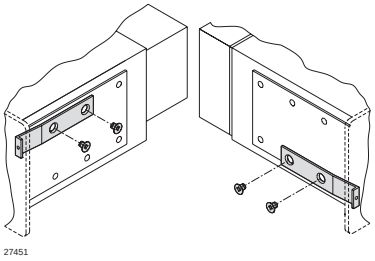

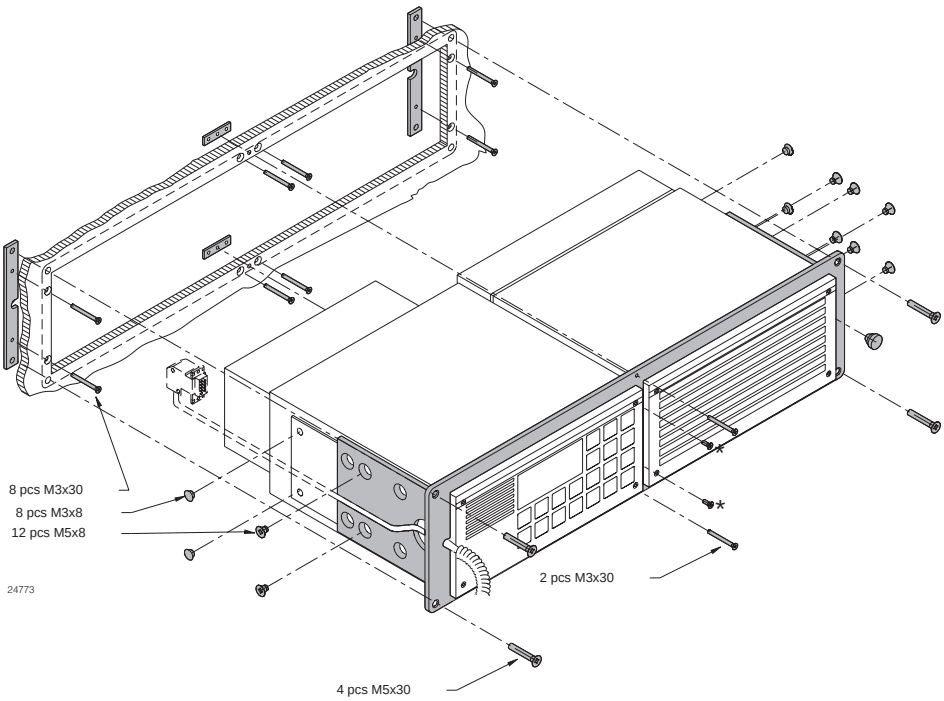

2.4 HANDSET

The handset can be placed anywhere near the VHF set. The cable is nine cored and connected to the rear plate through a 9 pin Sub D connector with lock nuts.

Installation of the cable, see the drawings of the mounting brackets, section 2.3 DIMENSIONS AND DRILLING PLAN. The cable grommet must be placed in the most convenient groove in the mounting bracket.

If more than one handset is needed, see section 2.12. and 2.13. in part II, **SPECIAL INSTALLATION WITH 2 OR 3 MICRO TELEPHONES.**

2.5 MICROTELEPHONE CONNECTOR

Wiring of the micro telephone connector.

PIN NUMBER	FUNCTION
1	Telephone +
2	Ground
3	Ground
4	Microphone
5	Handset key
6	AF from RX buffer
7	Interrupt/Distress cry *
8	Serial input/output
9	+13V Internal/Phone Patch**

*/ Signal selection on jumper P608 on the Interface-unit.
**/ Signal selection on jumper P934 on the Filter-unit

2.6 POWER SUPPLY

The standard power supply for RT2047 is 12V DC .

For 24V DC supply an external power supply N418 (switch mode) or the N420 a 24V DC to 13.2V DC serial regulator can be used, see part II, section 2.14 . and 2.15 .For 110V AC, 127V AC, 220V AC or 237V AC an external power supply N163S must be used together with N418 or N420 .

2.7 POWER AND EXT. LOUDSPEAKER CONNECTOR

Wiring of the power and ext. loudspeaker connector.

PIN NUMBER	FUNCTION
1	+Ext. loudspeaker*
2	No connection
3	+12V Power Supply
4	ON/OFF for 24V Supply
5	-12V Power Supply
6	-Ext. loudspeaker*

*/ If necessary a 4-8 ohm (4 W) external loudspeaker can be connected to pin 1 and 6 of the power connector J802. External loudspeakers H2054 and H2074 are available for this option.

2.8 ANTENNAS

All common 50 ohm antennas, which cover the used frequency range with a reasonable standing wave ratio, maximum 1.5, are applicable.

The antenna is connected to the set by means of a 50 ohm coaxial cable with low loss, e.g. RG213U. At the cable end a PL259 plug is mounted.

The antenna must be placed as high and as free of obstructions as possible. The horizontal distance to metal parts must be at least 1.0 metre.

S. P. Radio has an antenna with the necessary specifications available for purchase. The mentioned antenna is characterised by small external dimensions. See the special brochure **'VHF AERIALS'** for particulars.

2.9 SPECIAL OPTIONS

K-SWITCH.
It is possible to change between standard functions and the German river boat functions by installing an external switch.

SELCALL RELAY.
When the selcall has accepted a CQ or individual call signal, the selcall relay, RE1-9 on the Filter-unit will turn on and short-circuit two wires, which can be used for remote alarm. Max. contact load: 100V AC/24V DC - 2A. This option is available on the filter print.

AF TO INFORM. DECODER.
The circuit giving AF signals to the information decoder is turned on when the set has accepted a CQ or individual call signal. The circuit is turned "ON" or "OFF" like the relay RE1-9. This option can be found in connector P4-6 on the interface print.

AUX II.
When an information on certain channels is wanted, i.e. controlling a watch keeping receiver, the AUX II information can be used. A relay RE2-9 on the Filter-unit is controlled through the buffer/inverted U11/5-6 from the ìC U19-6. Max. contact load: 100V AC / 24V DC - 2A. The AUX II option is available on the filter print.

OUTPUT TO RECORDER.
Through the connector P4-6 pin 1 and 2 on the INTERFACE UNIT (6) the AF signal to the telephone output can be led to a tape recorder. This option is located in connector P4-6.

AUX 1
The option AUX I is for-either internal or external use. It is placed in P3-6 pin 1 on the INTERFACE UNIT. Max. level on the output of the U11-6 must not be more than the battery level, because a diode is connected to the supply pin in the IC.

DISTRESS CRY / INTERRUPT
Jumper P8-6 on the interface print leads either 'Distress Cry' or 'Interrupt' through the filter print to the handset key connector. The Interrupt signal is required when RT2047 is used with the VHF DSC RM2042 and Distress Cry is used for scramblers CRY2001 and CRY2002.

PHONE PATCH / +13V
Jumper P34-9 is used for selecting if The 'Phone Patch' signal or if '+13V' should be led to the handset key connector. +13V is required when RT2047 is used with the VHF DSC RM2042 and Phone Patch is used for the Phone Patch unit H2047.

2.10 REAR VIEW OF VHF RT2047

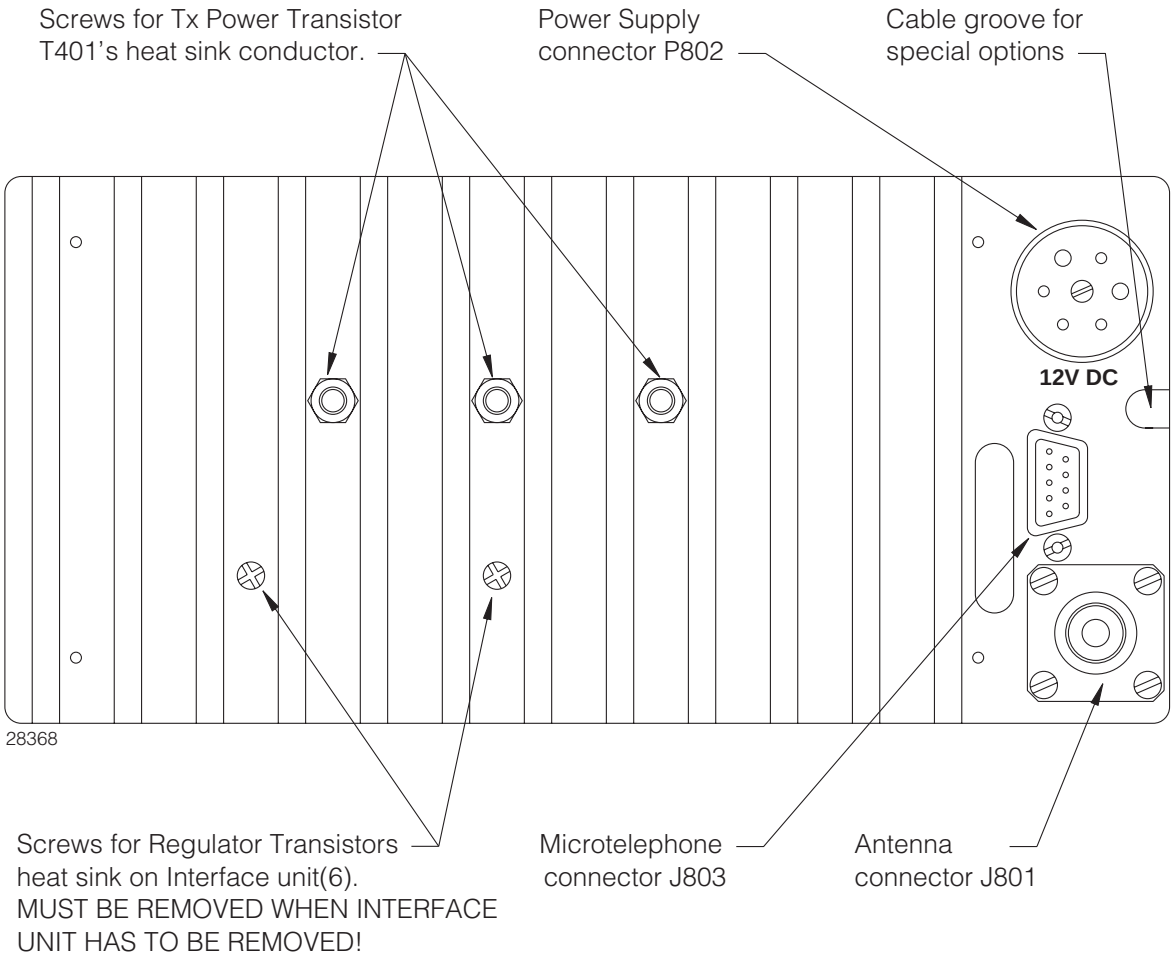

2.11 STANDARD FREQUENCY TABLE

CHANNEL	TRANSMITTING FREQUENCY (MHz)	RECEIVING FREQUENCY (MHz)	
		INT'L MODE (INT-CHANNELS)	US MODE (A-CHANNELS)
01	156.050	160.650	156.050
02	156.100	160.700	160.700
03	156.150	160.750	160.750
04	156.200	160.800	160.800
05	156.250	160.850	156.250
06	156.300	156.300	156.300
07	156.350	160.950	156.350
08	156.400	156.400	156.400
09	156.450	156.450	156.450
10	156.500	156.500	156.500
11	156.550	156.550	156.550
12	156.600	156.600	156.600
13	156.650	156.650	156.650
14	156.700	156.700	156.700
15	156.750	156.750	156.750
16	156.800	156.800	156.800
17	156.850	156.850	156.850
18	156.900	161.500	156.900
19	156.950	161.550	156.950
20	157.000	161.600	161.600
21	157.050	161.650	157.050
22	157.100	161.700	157.100
23	157.150	161.750	157.150
24	157.200	161.800	161.800
25	157.250	161.850	161.850
26	157.300	161.900	161.900
27	157.350	161.950	161.950
28	157.400	162.000	162.000
60	156.025	160.625	160.625
61	156.075	160.675	160.675
62	156.125	160.725	160.725
63	156.175	160.775	156.175
64	156.225	160.825	160.825
65	156.275	160.875	156.275
66	156.325	160.925	156.325
67	156.375	156.375	156.375
68	156.425	156.425	156.425
69	156.475	156.475	156.475
70	156.525	156.525	156.525
71	156.575	156.575	156.575
72	156.625	156.625	156.625
73	156.675	156.675	156.675
74	156.725	156.725	156.725
77	156.875	156.875	156.875
78	156.925	161.525	156.925
79	156.975	161.575	156.975
80	157.025	161.625	157.025
81	157.075	161.675	157.075
82	157.125	161.725	157.125
83	157.175	161.775	157.175
84	157.225	161.825	161.825
85	157.275	161.875	161.875
86	157.325	161.925	161.925
87	157.375	161.975	161.975
88	157.425	162.025	157.425
WX1	Inhibit	162.550	162.550
WX2	Inhibit	162.400	162.400
WX3	Inhibit	162.475	162.475
WX4	Inhibit	161.650	161.650

CONTENTS

1 GENERAL INFORMATION

1.1 GENERAL DESCRIPTION

RT2047 can operate in duplex and simplex mode.

RT2047 is provided with built in duplex-filter for duplex communication with one antenna.

RT2047 includes all 55 international and U.S. VHF marine channels, and is prepared for up to 20 private channels to be selected as simplex or duplex channels. As option up to 67 private channels can be provided.

RT2047 has six scanning programmes, one standard programme, and 5 individually programmable scanning programmes.

RT2047 has built in dual watch facility, which enables the operator to listen to two channels simultaneously (the selected channel and a preference channel - normally CH16.)

RT2047 is provided with quick selection of channel 16.

RT2047 is provided with selcall decoder. Selective calls (CALL) or all ships calls (CQ) from the coast station will be decoded.

RT2047 receiver section is a double-conversion superheterodyne system, which makes use of a phase-locked digital frequency synthesizer for frequency generation based on a single crystal to provide all the standard channels and the private channels.

RT2047 transmitter section is a phase-locked phase-modulated signal generator with a solid state RF power amplifier.

RT2047 is provided with two microcomputers, one for controlling the frequency synthesizer, reading from and to EEPROMS, controlling the squelch and volume functions, and controlling the selcall filter. The other µC is controlling the display drivers, the dual watch and scanning functions.

RT2047 is for 12 Volt DC supply. Voltage change-over from 24V to 12V is done by the switch-mode power supply N418.

RT2047 employs the most modern circuit technology, housed in a corrosion resistant aluminium cabinet with a green nylon finish.

RT2047 is provided with membrane switches for controls, easy to use, reliable and hard-wearing. Cut-outs in the metal front serve as a safe finger-guide.

RT2047 is fitted with night illumination.

RT2047 has been prepared with a serial communication interface for DSC (Digital Selective Call) operation together with S.P. RADIO's VHF DSC RM2042. DSC is the globally adopted general purpose system for selective calling in the ship-to-ship, ship-to-shore and shore-to-ship directions and can best be compared to ordinary telephony, giving you direct access to the national telephone network in those areas where the coast stations have the automatic services. DSC also enables you to make automatic distress calls containing the ships position etc. complying with the international requirements stated by IMO in the Global Maritime Distress and Safety System, known as GMDSS.

RT2047 is prepared for scrambled communication in conjunction with Scramblers CRY2001 or CRY2002, both produced by A/S.

1.2 TECHNICAL DATA

VHF RT2047 fulfils the International CAPT regulations.

GENERAL SPECIFICATIONS

All international maritime VHF channels		
Private Channels	20 as option up to 67	
Operation	Duplex and Simplex	
Modulation	G3EJN (Phase)	
Antenna Impedance	50 ohm	
Frequency Stability	+/- 10 ppm	
Temperature Range	-20 C to +55 C	
Nominal Power Supply	13.2V DC	
Power Supply Variation (with reduced data according to international standards)	12V DC -10% to +30%	
Power Consumption	Standby	= 0.5 Amp.
	Transmit	= 6 Amp.
Dimensions	Height:	115 mm
	Width:	225 mm
	Depth:	262 mm

RECEIVER

Frequency Range Simplex	155.400 - 158.000 MHz
Frequency Range Duplex	160.000 - 162.600 MHz
Sensitivity	0.35 uV pd at 12 dB SINAD
Duplex desensitisation	Less than 2 dB
AF Output Power	3 Watt/4 ohm
Telephone Output	0.45V RMS/200 ohm
Distortion	Less than 5%
Scanning Facilities	5 scanning programmes with possibility for all your channels in each programme except the private channels from P20 to P67
Selective Call Decoder	According to CCIR

TRANSMITTER

Frequency Range	155.400 - 158.000 MHz
RF Output Power	25 Watt, +0 to -1 dB
Reduced RF Output	0.5 to 1 Watt
Distortion	Less than 2%

1.3 CONTROLS

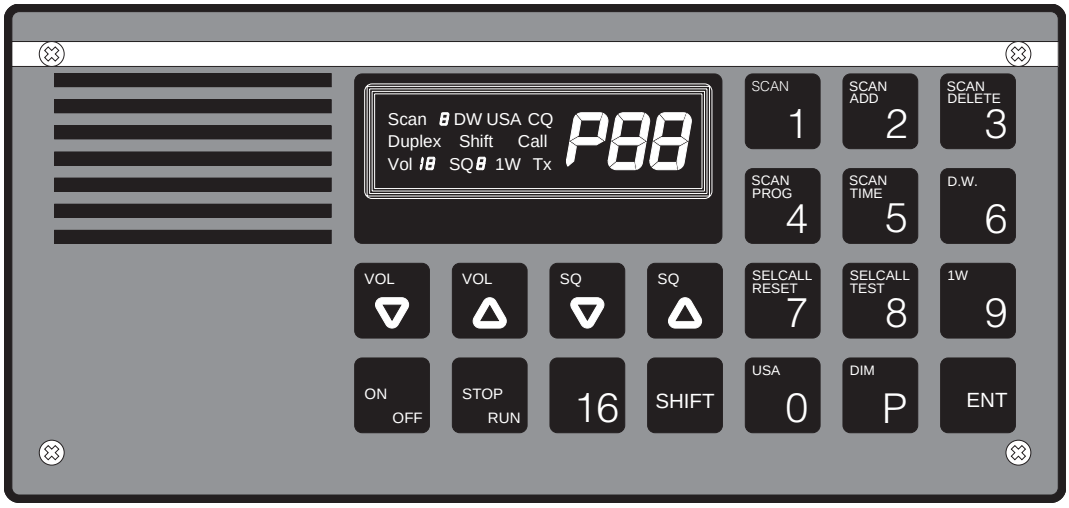

23990

Press ON OFF Turns the set on or off.

Press VOL ▲ Increases volume progressively in 16 steps.

Press VOL ▼ Reduces volume progressively in 16 steps.

Press SQ ▲ Increases squelch sensitivity progressively in 8 steps, a gradual exclusion of weak signals with atmospherics.

Press SQ ▼ Reduces squelch sensitivity progressively in 8 steps.

Press STOP RUN Stops and starts scanning sequence. Listen on several predetermined channels.

Press 16 Quick select of the call and distress channel 16.

Press 1 Digits from 1 to 0.

Press P Selects private channels.

Press ENT Terminates the keying in of selected channels, scanning programmes, scan time etc.

Press SHIFT Activates the functions marked in orange on the keyboard.

SHIFT FUNCTIONS

Press [SCAN] Selects scanning programmes.

Press [SCAN ADD] Adds a channel to the scanning table.

Press [SCAN DELETE] Deletes a channel from the scanning table.

Press [SCAN PROG] Stores the current scanning programme in the memory.

Press [SCAN TIME] Selects the scan time from 1 to 99 seconds. The time chosen will be used to listen on one of the secondary channels receiving a signal.

Press [D.W.] Selects the dual watch facility.

Press [SELCALL RESET] Resets the selcall decoder after a call.

Press [SELCALL TEST] Tests the selcall decoder.

Press [1W] Selects 1 W reduced power output.

Press [USA] Selects the VHF channels used in USA.

Press [DIM] Switches the panel illumination on or off.

Note: See the VHF RT2047 Operating Manual for functional description.

1.4 PRINCIPLE OF OPERATION

1.4.1 FREQUENCY GENERATION

The frequencies are generated from a crystal oscillator operating on 21 MHz. The 21 MHz is divided in the REFERENCE DIVIDER to 2.1 MHz which is the input to the RX-REFERENCE DIVIDER and also the clock-signal for the microcomputer on the Interface Unit. In the RX-REFERENCE DIVIDER the 2.1 MHz is divided by 168 to 12.5 KHz which is reference for the PHASE DETECTOR. This makes it possible to change the frequency from the RX-VCO with 12.5 KHz intervals.

The signal from the RX-VCO is divided in a PRESCALER which divides by 33 until the A-COUNTER has reached zero and then it divides by 32. The N-COUNTER divides the output from the PRESCALER, and the output is led to the PHASE-DETECTOR, and here it is compared with the 12.5 KHz. If there is a difference an error voltage will be generated. This is integrated in the LOOP-FILTER and the output of this filter controls the RX-VCO. The frequency of the RX-VCO is the receiving frequency minus the intermediate frequency.

$$f_{LO1} = f_{RX} - f_{1IF} = f_{RX} - 21.4 \text{ MHz}$$

The output from the RX-VCO is mixed with the output from the TX-VCO which is in lock when it is 16.8 MHz above the RX-VCO. This means that the receiver always is 4.6 MHz above the transmitter, namely 21.4 - 16.8 = 4.6; and this difference is equal to the duplex distance. The 16.8 MHz from the MIXER is divided by 32 to 525 KHz, which is compared with the 21 MHz divided by 40 in the REFERENCE DIVIDER. The error voltage is integrated in the LOOP-FILTER, and the output of this filter controls the TX-VCO.

1.4.2 RECEIVER

The antenna-signal is led through the duplex-filter and the antenna relay to the RF-AMPLIFIER. The bandpass filters are tuned by means of capacitor-diodes which are controlled by means of a DC-voltage which is derived from the control-voltage to the RX-VCO. In the FIRST MIXER the antenna signal is mixed with the output from the RX-VCO to the intermediate frequency 21.4 MHz. In the integrated IF circuit, the first IF frequency on 21.4 MHz is mixed with a crystal oscillator signal on 20.945 MHz to reach the second IF frequency on 455 kHz. This signal is filtered in the ceramic filter, before it is amplified and detected in the integrated IF-circuit. The audio frequency signal is amplified and led through an active filter providing the frequency response further to the telephone amplifier and the AF power amplifier.

1.4.3 TRANSMITTER

The microphone signal is led through the MICROPHONE AMPLIFIER where the necessary amplification, limiting, and filtering takes place. The limiting is done by a clipper. The signal from the MICROPHONE AMPLIFIER is led to the LOOP-FILTER, where the phase modulation of the transmitter takes place. As the TX-VCO oscillates directly on the transmitting frequency, the signal only has to be amplified. This is done in the TX-BUFFER, PA-DRIVER, and the PA-POWER AMPLIFIER. The power supply for the PA-driver is adjustable, and is used for adjusting the output power. The harmonics of the output is filtered in HARM-FILTER , before it is led through the ANTENNA-RELAY and the DUPLEX-FILTER to the antenna.

1.4.4 THE MICROCOMPUTERS

The µC on the Interface Unit is taking care of calculating the dividing figure for the synthesizer, reading from and to the EEPROMs, controlling the squelch and volume functions, and controlling the selcall filter. The µC on the Keyboard Unit is taking care of the keyboard scanning, the input from the handset key and the display drivers as well as the Dual Watch and Scanning functions. The keyboard µC is also handling the serial SP VHF-BUS communication with external devices such as the VHF DSC - RM2042. The communication between the two µC’s is accomplished by a RS232C -type serial connection.

1.5 BLOCKDIAGRAM

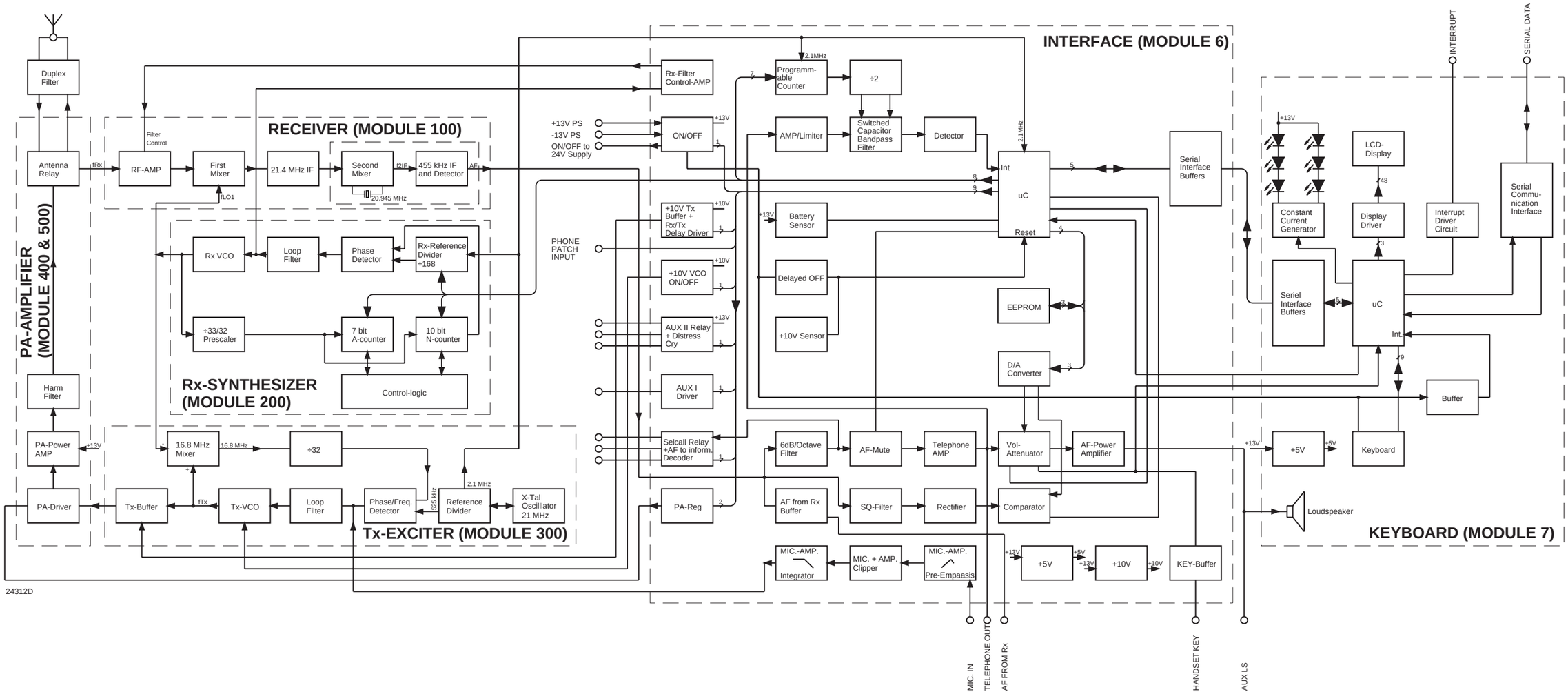

CONTENTS

2 CIRCUIT DESCRIPTION

2.1 RECEIVER UNIT MODULE 100

The receiver unit includes the following circuits:

2.1.1 RF-AMPLIFIER AND FIRST MIXER

The RF-amplifier working in the frequency range 155.4 MHz to 162.4 MHz consists of the transistor Q101 and the two double-tuned filters surrounding it. The signal is led from the aerial through the duplex-filter to the antenna switch and from there to the receivers input-filter. The input filter and the intermediate filter are variable capacitance tuned filters, controlled by a DC-voltage derived from the RX-VCO control voltage. This secures an optimal filter response within the receivers frequency range. The two double-tuned filters create the necessary attenuation of signals distant from the wanted signal frequency in order to give the wanted spurious rejection of such unwanted signals. The amplifying transistor Q101 (which is a large current, low noise transistor in a common-base configuration) secures by its gain the receiver overall noise figure and a good two-signal performance. The RF-input to the first mixer is taken from the coil L104 in the intermediate filter. Mixer transistor Q102 is of the JFET-type, where the first LO-signal is injecting into the source from a 50 ohm generator. The wanted 21.4 MHz IF-output is selected by means of the tuned drain circuit consisting of L105, C117, C119, and R110 which also creates the necessary impedance matching the IF-crystal filter.

2.1.2 IF-FILTER AND AMPLIFIER

The receivers adjacent channel selectivity is maintained by means of the crystal filter FL101. The output from this filter is led to the IF-amplifier with the transistor Q103, L106, C123, and R112 giving the appropriate impedance matching the filter output. The amplifier gives the needed power gain between the crystal filter and the second mixer and also secures good large signal performance.

2.1.3 SECOND MIXER, CERAMIC FILTER, DETECTOR AND AF AMPLIFIER

The integrated IF circuit includes the second mixer, the limiting amplifier and the detector with post AF amplifier.

The second local oscillator signal is generated by means of the integrated oscillator and an external crystal X101, running on 20.945 MHz. The signal out of the second mixer (455 kHz) is fed through the ceramic filter FL102 to the limiting amplifier and discriminator in U101.
The quadrature phase discriminator includes the external phase shift network consisting of the tank circuit with L108, C129 and R120.
The AF output from the detector is amplified by means of an internal operational amplifier and finally buffered by means of the discreet transistor amplifier with Q104.

2.1.4 IF POWER SUPPLY

The integrated IF circuit and AF buffer amplifier are powered from an integrated 5V series voltage regulator U102. The input voltage for this circuit is the receiver 10V supply.

COMPONENT LOCATION RECEIVER UNIT MODULE 100

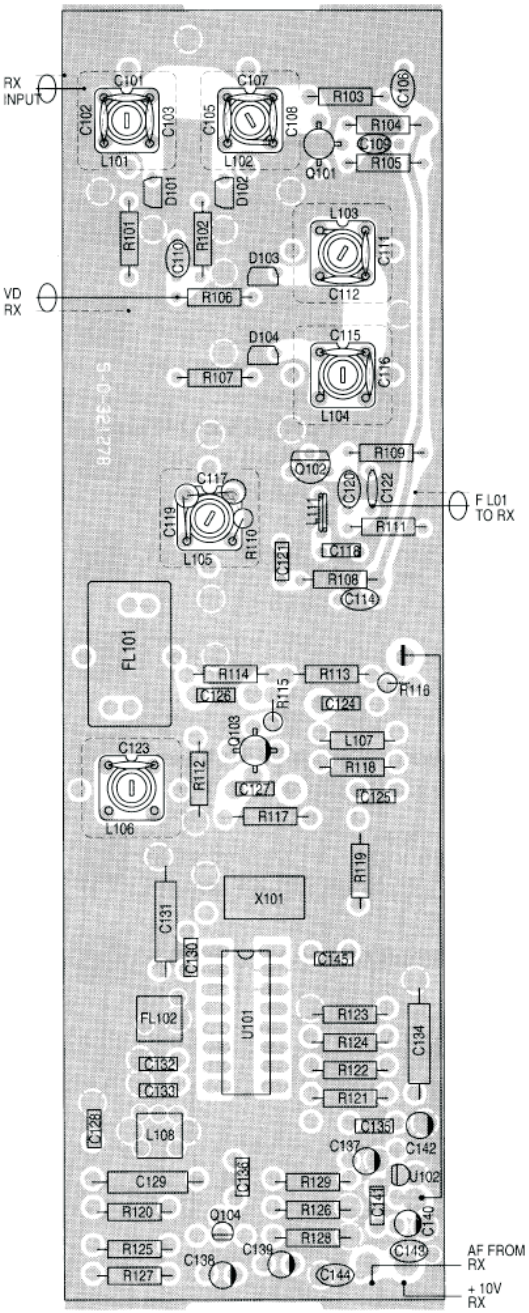

View from component side
with upper side tracks.

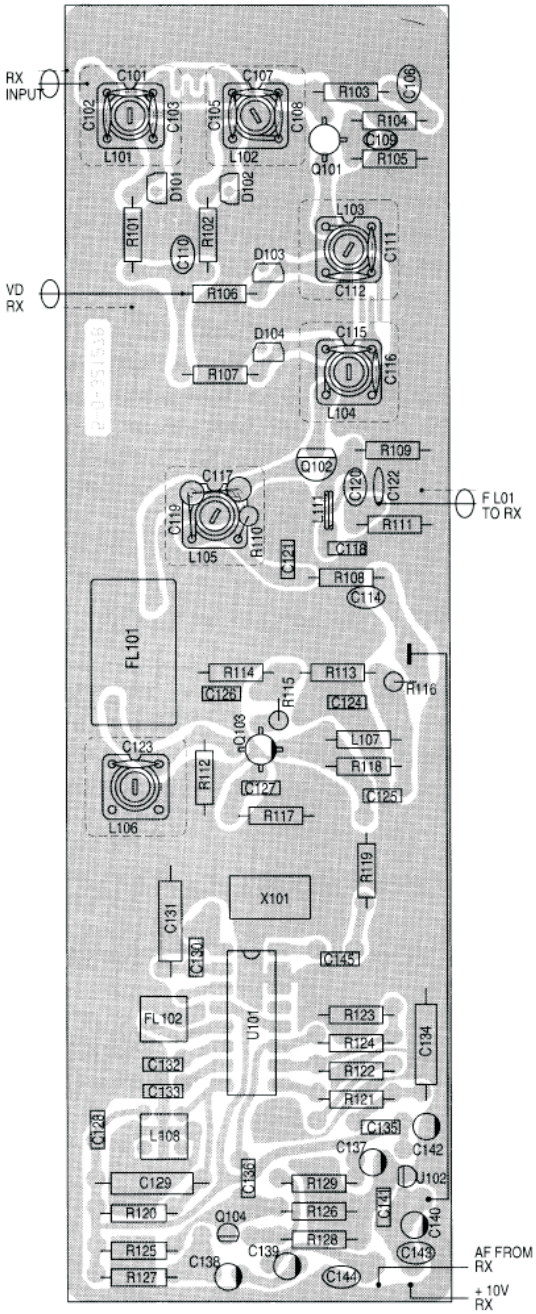

View from component side
with lower side tracks.

32127B

DIAGRAM RECEIVER UNIT MODULE 100

AC voltages outside frame of diagram.
▲ : Measured with oscilloscope or frq. counter.
⊙ ⊡ : Measured with test probe.
● : Connections to module.
[ ] : Approx. measurement with test probe.

Test conditions: ⊙
Voltages without brackets:
Antenna signal 1 mV pd:
$\Delta f = \pm 3$ kHz; $f_m = 1$ kHz
Voltages in brackets:
Antenna signal 10 mV pd:
$\Delta f = \pm 3$ kHz; $f_m = 1$ kHz

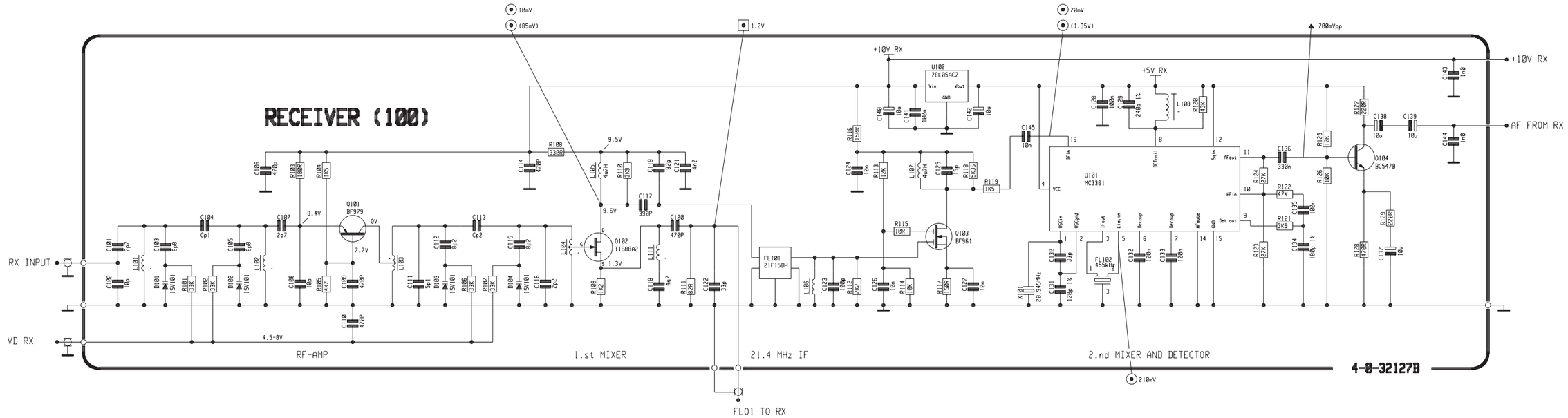

This diagram is valid for PCB rev. 32127B.

2.2 RX-SYNTHESIZER UNIT MODULE 200

The RX-synthesizer unit includes the following circuits:

2.2.1 RX-VCO AND BUFFER AMPLIFIERS

The transistor T203 is producing 8.3 V supply voltage for the RX-VCO and bias for the buffer amplifiers consisting of the transistors T201 and T204. The RX-VCO comprises a Field Effect Transistor T202 (the oscillator transistor), two coaxial coils L203, L204, two capacitors C212, C214, and a variable capacitance diode D201. The frequency is mainly determined by the components L203, L204, C214, and D201. The RX-VCO is a voltage controlled oscillator where the control voltage from the loop filter determines the frequency by means of D201. A high control voltage to the variocap. diode D201 means a small capacitance in the diode which means a high frequency of the VCO. In the opposite way a low control voltage means a low VCO frequency. The RX-VCO signal is passed to two buffer amplifiers via low pass filter C209, C206, L201. The L01 buffer transistor T201 is producing 5 mW for the 1st mixer in the receiver. The 5 mW is taken from the tuned filter L202, R202, C207, and C208. The prescaler buffer transistor T204 is producing 0.25 mW for the 16.8 MHz mixer in the TX-Exciter-Unit. It is also producing signal for 32/33 prescaler. The signal from transistor T204 is led through a low pass filter C217, L206, and C222. The gain in both buffers can be adjusted by the potentiometer R209.

2.2.2 32/33 PRESCALER

The integrated circuit IC201 is a two modulus prescaler based on the ECL technique. From the control logic in the programmable divider IC202 pin 14, a high or low level is led to the prescaler IC201 pin 1. A high level at IC201 pin 1 causes the prescaler to divide by 33 and in turn a low level at pin 1 sets it up for dividing by 32. The resistor R232 and the diode D204 work as a speed-up circuit.

2.2.3 THE PROGRAMMABLE DIVIDER

The programmable divider IC202 contains two phase detectors, a lock detector, a reference divider, an A-counter, a N-counter, control logic, and 8 latches. Only phase detector B of the detectors is in use. When the VHF is switched on the microcomputer will load dividing figures into the reference divider and into the A and N-counters. The microcomputer loads only one latch at a time.
By setting up a code at the address inputs Al - A2 the microcomputer selects a latch and at the same time a code for the dividing figure is set up at the data inputs D0 - D3. The microcomputer sends a strobe pulse to IC202 pin 12 and the selected latch is loaded. The procedure is then repeated until all the latches are loaded.
When the channel or the function of the VHF is changed it is only the latches for the A and N-counter that change data. The reference frequency is 2.1 MHz and it is constant. Therefore it is not necessary to change the dividing figure every time.
In the beginning of a counting period the prescaler IC201 starts dividing by 33 and the A and N-counters count down. First the A-counter reaches zero and stops counting and the control logic shifts the prescaler to divide by 32. Then the N-counter reaches zero and sends a pulse to the phase detector B, and the control logic shifts the prescaler to divide by 33. The control logic also reloads the A and N-counters with data from their latches and the whole procedure starts from the beginning.
The pulse frequency from the reference divider is 12.5 KHz. If the RX-VCO frequency is correct the pulse frequency of the N-counter is also 12.5 KHz and in phase with the pulse from the reference divider. The phase detector B compares the phase of the two pulses. If they are not in phase the detector sends correction pulses to the phase-detector-pump for correcting the frequency/phase of the RX-VCO. However, the synthesizer circuit is born with a small phase error, therefore the phase detector is sending small correction pulses to transistor T210 with a frequency of 12.5 KHz.

2.2.4 PHASE DETECTOR PUMP AND LOOP FILTER

We assume that the RX-VCO frequency has decreased from its nominal frequency, The phase-detector now sends negative correction pulses from IC202 pin 17 to T210, which goes on. A current will then flow from C225 through R225 and R229 and into T210. This current will discharge C225 forcing the output voltage from the transistors T205 and T206 to increase until the VCO reaches the correct frequency. If the RX-VCO frequency is too high, the negative correction pulses from the detector at pin 16 of IC202 will turn transistor T209 off. The collector voltage of transistor T209 increases and a current will flow through the diode D202, the resistor R225 and into the capacitor C225 and charge this capacitor. The output voltage at the collector of the transistors T205 and T206 will decrease until the VCO reaches its right frequency. If the phase-locked-loop is locked, both outputs of the phase-detector will be 5 V and the output voltage of the transistors T205 and T206 will have a value between 2 V and 10 V corresponding to the VC0-frequency. However, the system is working with a constant phase error and the phase detector sends small correction pulses to transistor T210, even the phase-locked-loop is locked. The four transistors T205, T206, T207, and T208 are working as an operational amplifier with the inverting input at base of transistor T208. Non-inverting input is at transistor T207 while the transistors T205 and T206 forms the output stage.

COMPONENT LOCATION RX-SYNTHESIZER UNIT MODULE 200

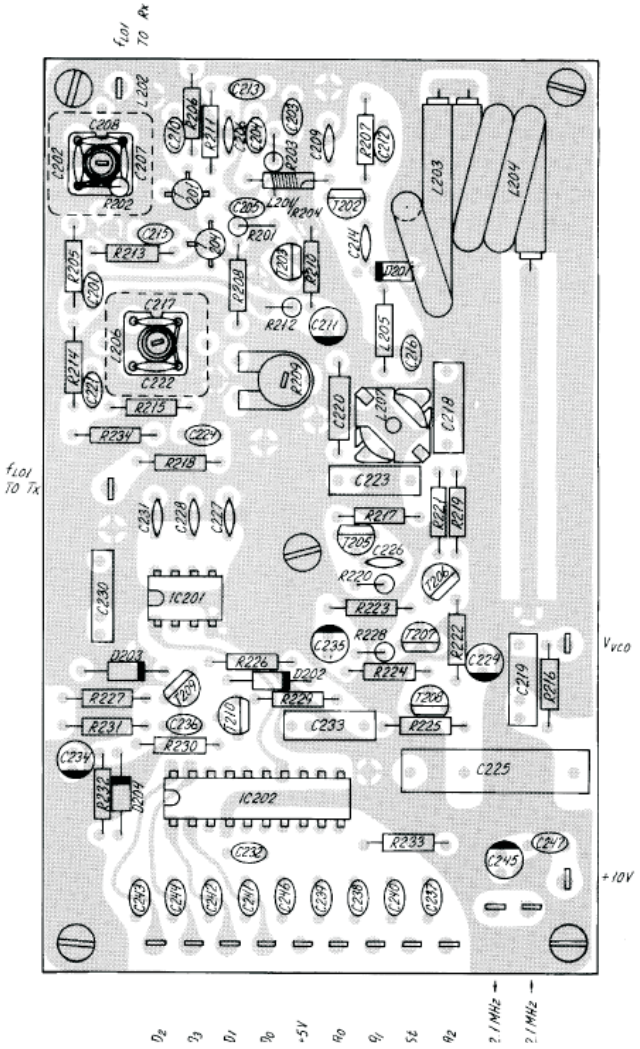

View from component side
with upper side tracks.

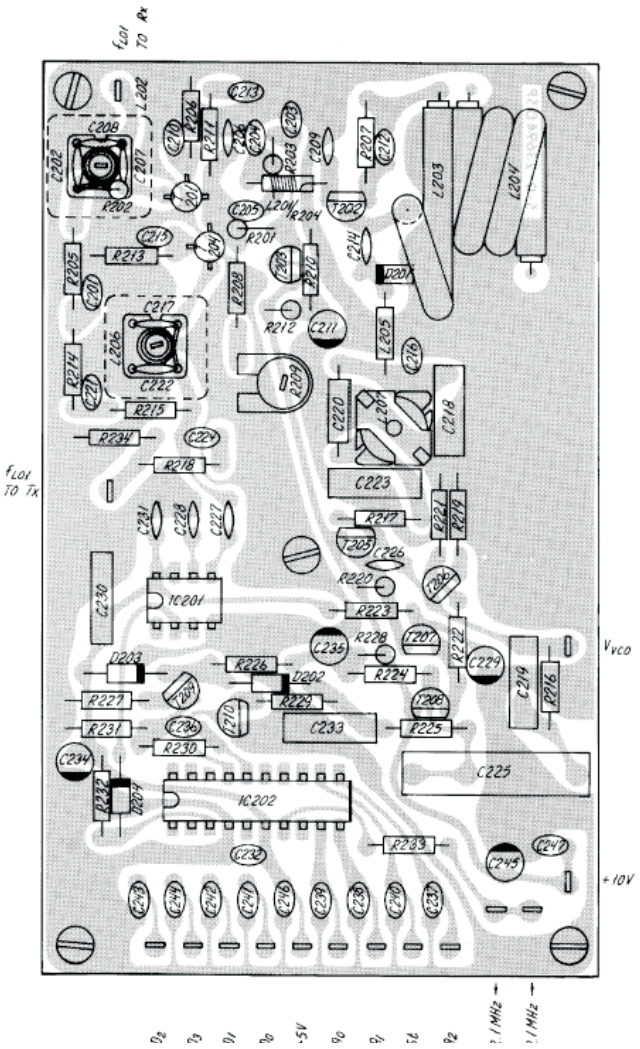

View from component side
with lower side tracks.

23694D

DIAGRAM RX-SYNTHEZISER UNIT MODULE 200

AC voltages outside frame of diagram.
▲ : Measured with oscilloscope or frq. counter.
⊙ ⊡ : Measured with test probe.
● : Connections to module.
[ ] : Approx. measurement with test probe.

Test conditions: ⊙
Voltages without brackets:
Antenna signal 1 mV pd:
$\Delta f = \pm 3$ kHz; $f_m = 1$ kHz
Voltages in brackets:
Antenna signal 10 mV pd:
$\Delta f = \pm 3$ kHz; $f_m = 1$ kHz

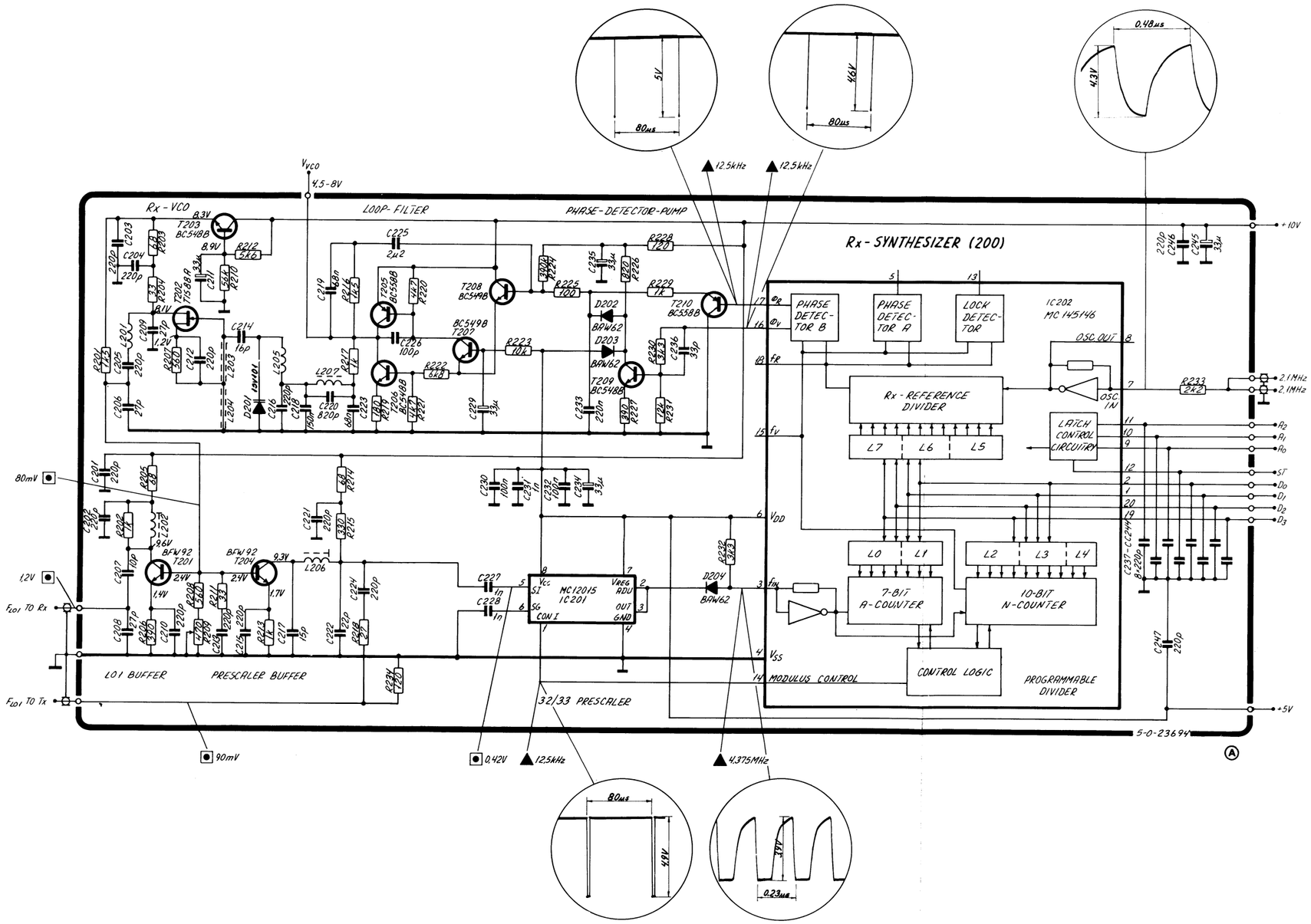

This diagram is valid for PCB rev. 23694D.

2.3 TX-EXCITER UNIT MODULE 300

The TX exciter unit contains the following circuits:

2.3.1 INSULATION BUFFER AND 16.8 MHZ MIXER

From RX-VC0 the signal is led to transistor T301 and from TX-VC0 the signal is led to transistor T302. The transistors are not coupled with common base and act as buffer amplifiers. The mixed signal over resistor T305 is led to the mixer amplifier T303 via capacitor C305. The differential signal which is the TX-VC0 frequency minus the RX-VC0 frequency is led to the amplifier transistor T304 through the low-pass filter consisting of C310, L301 and C311. In transistor T305 the signal is amplified to TTL level. The diode D301 works as a base clamp diode.

2.3.2 THE 21 MHZ OSCILLATOR

The oscillator is a Colpitt type and the oscillator transistor T308 is oscillating by means of a 21 MHz crystal X301.
The trimmer capacitor C331 is for fine adjustment of the oscillator frequency.
RF signal for the reference divider is led to transistor T307 for amplifying. In transistor T306 the signal is amplified to TTL level.

2.3.3 PHASE/FREQUENCY DETECTOR, 32 COUNTER AND REF. DIVIDER

The crystal frequency is led to IC306 pin 10 which is a decade counter. From output pin 5 of this, the frequency is divided by 5. This frequency is led to flip-flop IC305a, where the frequency is divided by 2. From IC305a pin 5, the 2.1 MHz is taken and this is the clock frequency for the microcomputer and the RX synthesizer. The resistor R322 is for pull-up and the ferrite bead FP301 is blocking for higher harmonics of the clock frequency.
From IC306 pin 8, the 21 MHz is also divided by 10. The frequency is divided by 2 in flip-flop IC305b and divided by 2 in IC304a. At IC304b pin 13, the 21 MHz is then divided by 40 and the frequency is therefore 525 KHz at which the phase detector is working.
From the other side the mixed signal of 16.8 MHz is led to the binary divider IC301 pin 10 where it is divided by 16. In flip-flop IC302b the signal is divided by 2. From IC320b pin 8 the 16.8 MHz is then divided by 32 giving 525 KHz.
The phase/frequency detector consists of IC302a, IC303, and IC304b. From IC304b pin 9 the detector is connected to the loop filter via the pull-up resistor R321 and the diode D303. The phase corrections pulse from the detector is active low and when the phase locked loop is in lock the duty cycle of the correction pulse is about 30 per cent.

THE CORRECTION PULSES:
After the count down of the 21 MHz the IC304b pin 9 goes low. Pin 8 goes high and this is connected to IC303 pin 2. When the 16.8 MHz is divided by 32 the IC302a pin 6 and IC303 pin 1 go high. When IC303 pin 13 is always high the IC303 pin 8 will go low and preset IC302a and IC304b; the correction pulse will then go high and so on. The propagation delay in the two inserters IC303 determines the size of the preset pulse.

2.3.4 TX-VCO

The TX-VCO comprises a Field Effect Transistor T311 (oscillator transistor), two coaxial coils L309 and L310, the capacitors C343 and C345, and a variocapacitor diode D302.
The frequency is mainly determined by L309, L310, C345, and D302. The TX-VCO is a Voltage Controlled Oscillator, where the control voltage from the loop filter determines the frequency by means of the variocapacitor diode D302. A high voltage to D302 means a smaller capacitor in D302 and again a higher VCO frequency. In the opposite way a small control voltage means a smaller frequency.
From drain of transistor T311 the signal is led to a buffer amplifier T310 via a tuned filter consisting of L308, R342, and C342. The ferrite bead is blocking for UHF oscillating. In the collector of T310 there is a tuned filter consisting of L307 and C340. From here the signal for two circuits is taken.
From an output on coil L307 the signal to the TX-buffer is taken through capacitor C338. Here the TX-VCO signal is amplified in transistor T309. In the drain of T309 there is a tuned filter consisting of L306, C332, C333, R332, and R333, which gives a 50 ohm generator for the Power Amplifier Unit. The output power from the TX-buffer is 25 mW and is adjusted by trimmer potentiometer R341.
Stop and start of both TX-buffer and TX-VCO are controlled from the microcomputer by controlling the supply for the transistor. This secures that the frequency is correct before the transmitter is started. From the collector of T310 the signal for the 16.8 MHz Mixer is taken via capacitor C341.

2.3.5 LOOP-FILTER

The Loop-filter amplifier is a differential amplifier (OP-Amp.) with the inverted input at the base of transistor T314, where also the phase detector is connected. The base of transistor T313, which is the non inverted input, is connected to +5V by means of R349 and R350. Transistor T312 is the output stage, and the control voltage for TX-VCO is taken over the resistor R346 and is filtered in the ripple-filter consisting of R345, C348, C347, and R344. At the input R351 and C352 are working as a filter against the higher harmonics in the phase detector pulse.
We assume that the system is in lock. While the detector pulse is low a current is flowing out of the capacitor C351 and the output voltage over R346 increases. The TX-VCO frequency is also increasing until the detector pulse goes high again. Because the diode D303 is blocking, a current flows into C351 through the resistors R354 and R355. The control voltage over R346 decreases and the frequency is also decreasing. The current which is flowing in and out of C351 is equal when the system is in lock. For principal understanding accept that C353 and R352 have no influence on the current to C351.
If the TX-VCO frequency is too high, the detector pulse gets smaller and that means that more current is flowing into C351 than out. That means again that the control voltage and the frequency will decrease until the frequency is correct again.
The opposite process will happen if the frequency is too low. Even though the system is in lock there is always a little phase error. The AF modulation signal is led into the Loop-filter via resistor R356. The control voltage is then modulated which will modulate the phase in the TX-VCO again.

COMPONENT LOCATION TX-EXCITER UNIT MODULE 300

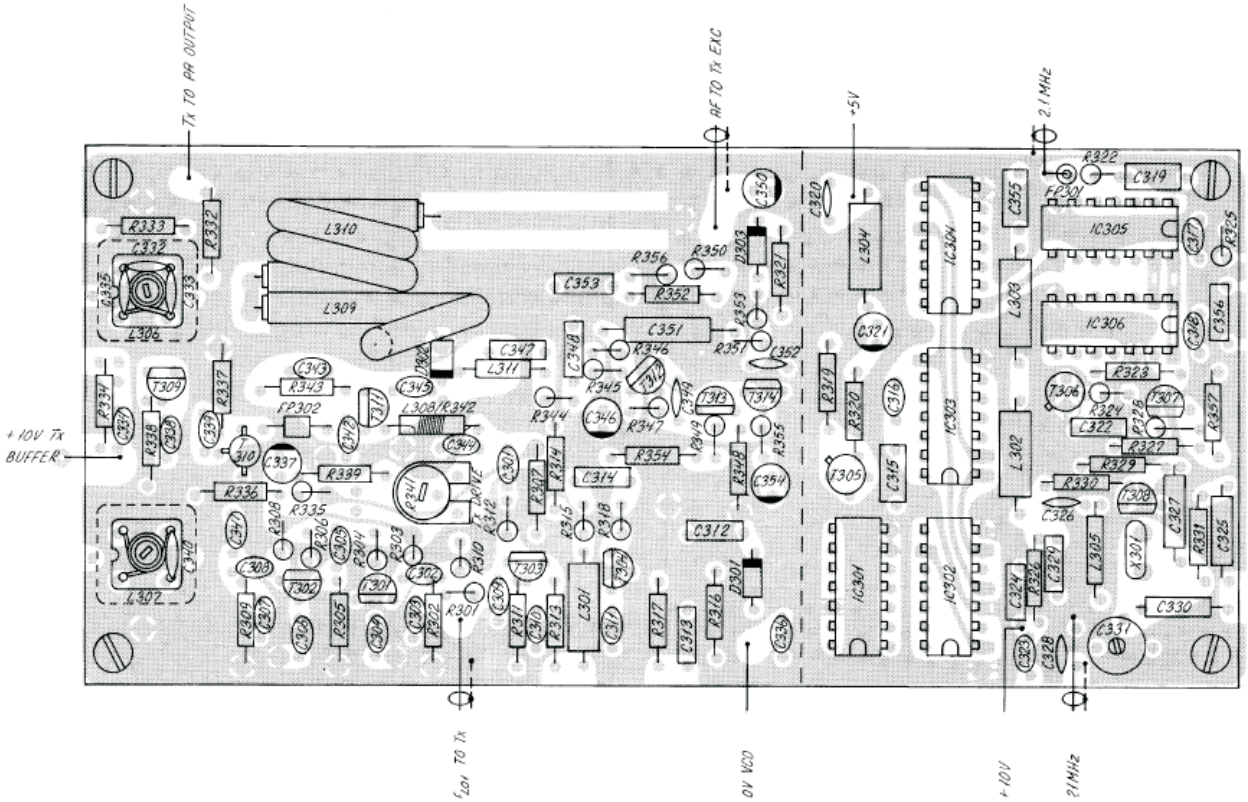

View from component side with upper side tracks.

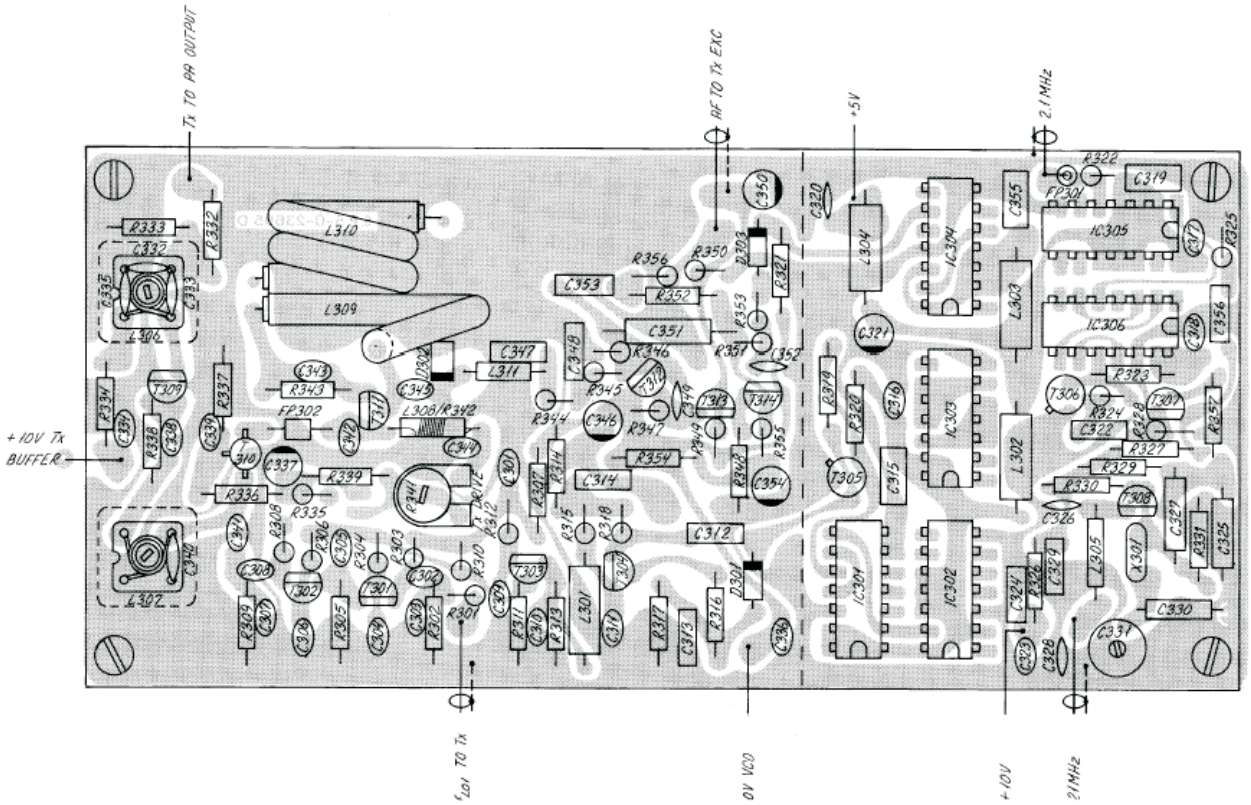

View from component side with lower side tracks.

23695D

DIAGRAM TX-EXCITER UNIT MODULE 300

AC voltages outside frame of diagram.
▲ : Measured with oscilloscope or frq. counter.
⊙ ⊡ : Measured with test probe.
● : Connections to module.
[ ] : Approx. measurement with test probe.

Test conditions: ⊙
Voltages without brackets:
Antenna signal 1 mV pd:
$\Delta f = \pm 3$ kHz; $f_m = 1$ kHz
Voltages in brackets:
Antenna signal 10 mV pd:
$\Delta f = \pm 3$ kHz; $f_m = 1$ kHz

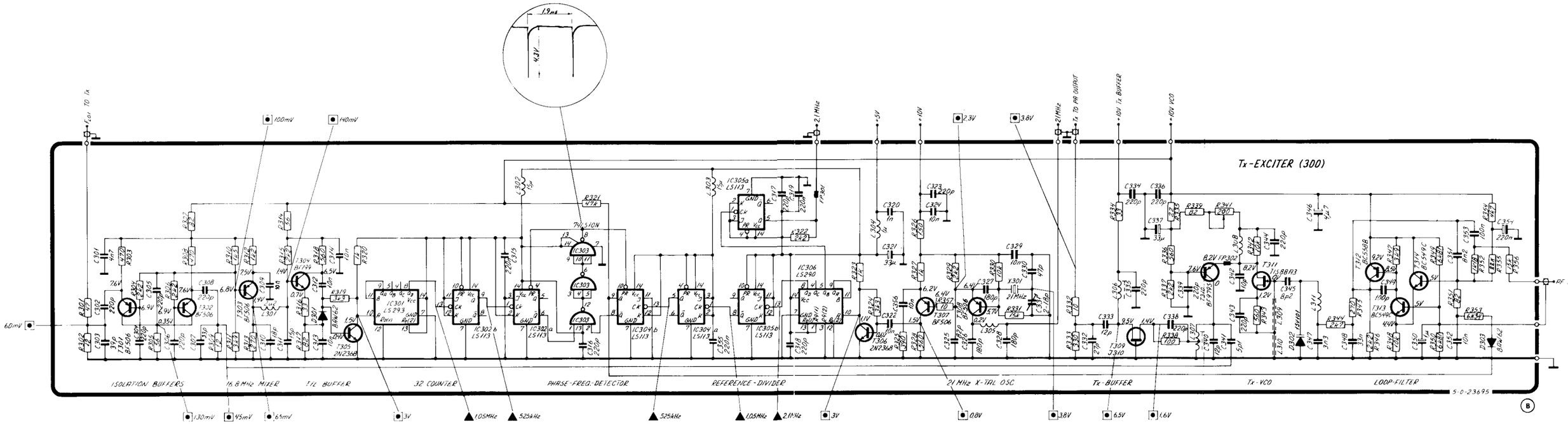

This diagram is valid for PCB rev. 23695D.

2.4 TX-POWER AMPLIFIER MODULE 400

The TX-power-amplifier includes the amplifier and a harmonic filter.

2.4.1 TX-POWER-AMPLIFIER

The amplifier consists of a single transistor output amplifier and a two transistor power driver. The transistors are both tuned classic amplifier circuits. The amplifier is made on double sided epoxy board, using micro strip technique in the tuning circuits. The power driver is fed from a 50 ohm generator with a power level of 25 mW. The final output power level is controlled by means of the supply voltage level fed to the power driver. In full power mode, the power driver will deliver about 4.5 - 5 W to the output transistor T401. The output signal is fed to the harmonic filter through capacitors C405 and C406.

2.4.2 HARMONIC FILTER

The harmonic filter is realised as a seventh-order Chebyschev-filter, which at the same time will provide the necessary attenuation of the harmonics generated by the power amplifier and a low insertion loss at the carrier frequency. The output from the harmonic filter is fed to the antenna relay.

2.5 ANTENNA RELAY (500)

The antenna relay, RE501, is placed in the Tx-power amplifier module (400).

The relay is equipped with 2 change-over contacts and is activated when the transmitter is keyed.

In simplex receiving mode the RF signal is led to the receiver (100) through both contacts from the Tx-section of the duplex filter.

In simplex or duplex transmitting mode the Tx-signal is led from the harmonic filter through a pin to the Tx-section of the duplex filter.

The other pin is grounded.

COMPONENT LOCATION TX-POWER AMPLIFIER MODULE 400 AND ANTENNA RELAY (500)

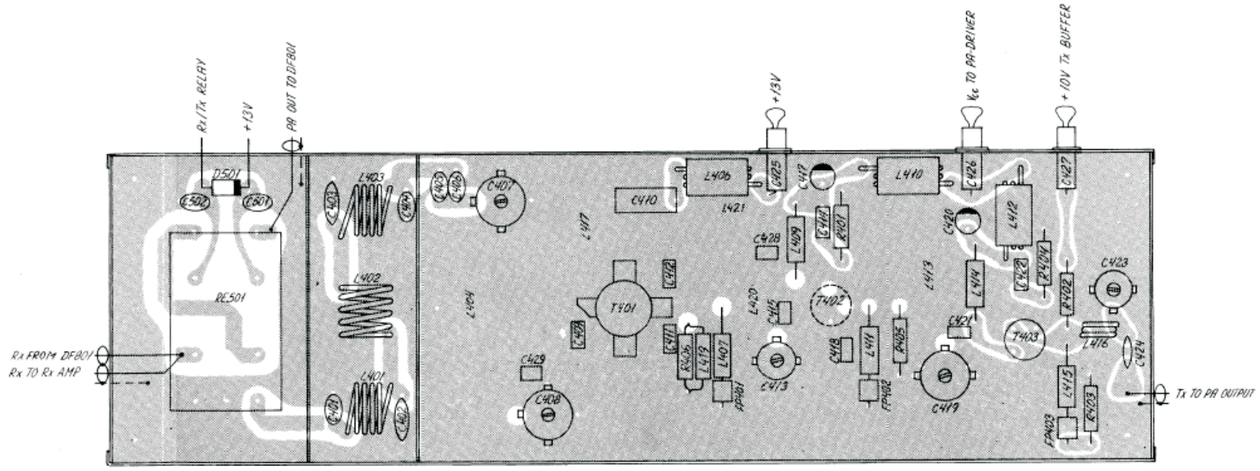

View from component side with upper side tracks.

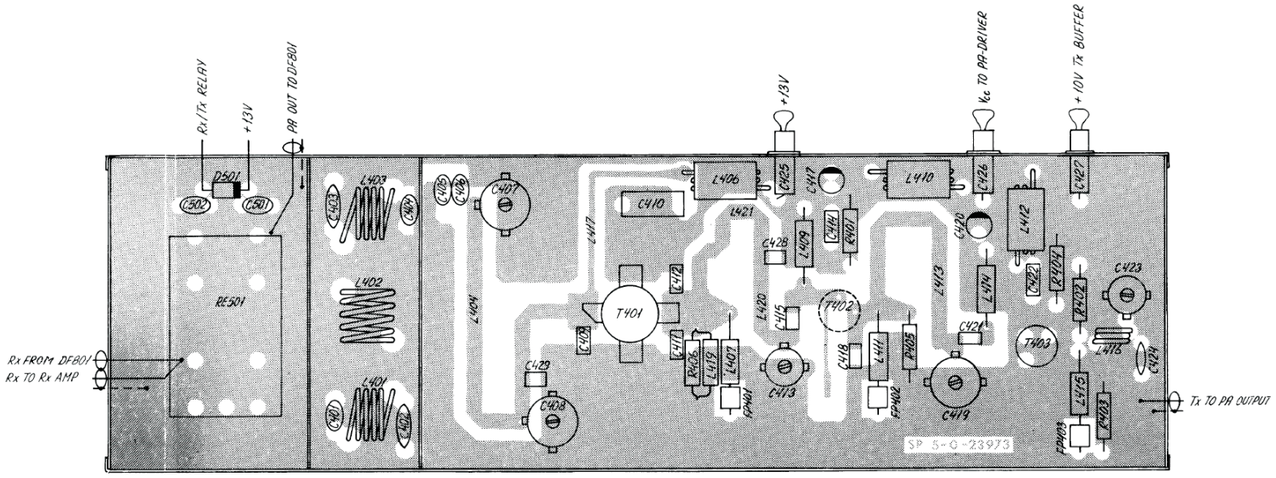

View from component side with lower side tracks.

DIAGRAM TX-POWER AMPLIFIER MODULE 400 AND ANTENNA RELAY (500)

AC voltages outside frame of diagram.
▲ : Measured with AF voltmeter.

Test conditions.
Voltages without brackets:
Operating in Rx position.
With antenna signal 1 mV EMF:
f= ±3 KHz; f_m = 1 KHz
Voltages in brackets:
No antenna signal, squelch max. closed.
Δf = ± 3 KHz; f_m = 1 KHz

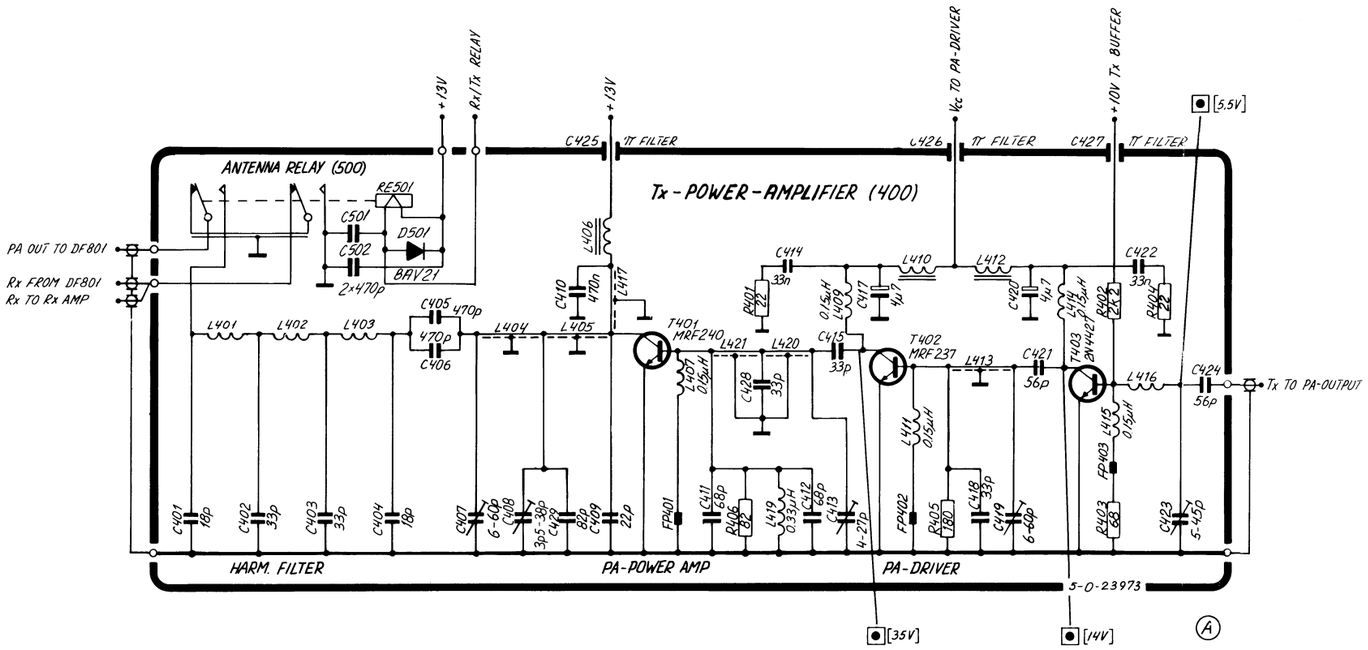

This diagram is valid for PCB rev. 23973B

2.6 INTERFACE UNIT MODULE 6/600

2.6.1 ON/OFF FUNCTION

ON
When the ON/OFF push button is activated Q4-6 is turned on and the relay RE3-6 is engaged. When the µC leaves reset condition PC5 is set to high level and Q5-6 will be conducting, keeping Q4-6 on.

OFF
When the ON/OFF push button is activated again U19-6 receives a message on the serial interface. Then it stores the actual settings of the channel, volume, squelch, power level, INT/USA mode and scan time. Afterwards PC5 is turned low, and Q5-6, Q4-6, and RE3-6 will switch off.

2.6.2 BATTERY SENSOR

If the battery voltage drops below approx. 9.5V the output of U7/3-6 goes high, and the µC will switch off the set.

2.6.3 DELAYED OFF

If the ON/OFF push button is kept activated longer than approx. 3 seconds, pin 12 on U12/2-6 will go low forcing the µC into reset. This means that as soon as the button is released the set will switch off.

2.6.4 TEMPERATURE SENSOR

Not mounted.

2.6.5 5V SUPPLY

The 5V power supply is an integrated, non adjustable regulator.

2.6.6 10V SUPPLY

The 10V supply is a serial regulator with current limiter. When it is switched on Q10-6 gets base current through R32-6 and R41-6. Thus Q10-6 draws collector current so that Q9-6 turns on and the output voltage rises. When Q13-6 begins to conduct the current in Q10-6 is reduced. Thus the base current in Q9-6 is also reduced and the output voltage stabilises . The current limiting starts when the voltage across R40-6 is big enough to turn Q6-6 on and makes the current flow through D8-6 to the emitter of Q10-6, and therefore the current in Q10-6 and also in Q9-6 will decrease which results in a decrease of the output voltage.

2.6.7 PA REGULATOR

By means of the PA regulator it is possible to adjust the output power of the transmitter. When the output from U3/2-6 is changed from O to 5V, Q7-6 is turned off. Thus Q8-6 is turned on and then also Q2-6 and Q1-6 and the output voltage rises. When the voltage at the base of Q8-6 is equal to the voltage on the base of Q7-6 the current in Q8-6 is reduced and then also in Q2-6 and Q1-6 and the output voltage stabilises. The output power from the TX POWER AMPLIFIER is adjusted by changing the output voltage of the PA REGULATOR with R68-6. When reduced output power is chosen (0W mode) the µC turns PB5 to 0 V and the reference voltage to the regulator will be lowered. It can be adjusted at R29-6, and thus also the reduced output power.

2.6.8 RX FILTER CONTROL AMPLIFIER

The control voltage from the RX VCO is turned into a control voltage to the capacity diodes in the band pass filters in the receiver.

2.6.9 MICROPHONE AMPLIFIER

The amplifier consists of three stages. In the first stage the signal is preemphasized. In the next stage the signal is clipped when the input signal is big enough, and in the last stage the signal is deemphasize before it is led to the modulator in the TX EXCITER. The deemphasizing is necessary because it is a phase modulator.

2.6.10 SQUELCH CIRCUIT

The signal from the receiver is fed to the active high pass filter U5/1-6. The filter attenuates signals below 10 KHz which means that talk will not be detected. The output of the filter is fed to the clipper Q15-6 and the detector comprising the capacitor C45-6, the diodes D13-6, D14-6, and the resistors R3/1-6 and R5/1-6. The rectified noise level is compared with a reference level in the voltage comparator U15/2-6. When the noise level is higher than the reference level, the output will be low. This output is connected to PD7 on the µC, which will turn off the AF by means of U18-6, except if the squelch setting is 0 (in the display), The correspondence between the number in the display and the latch U4-6 can be seen below:

SQ	Without carrier				With carrier			
	B8	B7	B6	B5	B8	B7	B6	B5
0	1	1	1	1	1	1	1	1
1	1	1	1	0	1	1	1	1
2	1	1	0	1	1	1	1	0
3	1	1	0	0	1	1	0	1
4	1	0	1	0	1	1	0	0
5	1	0	0	0	1	0	1	0
6	0	1	1	0	1	0	0	0
7	0	1	0	0	0	1	1	0
8	0	0	1	0	0	1	0	0

2.6.11 AF CIRCUITS

The AF signal from the receiver is fed to the active filter U5/2-6. The filter provides a frequency response of -6 dB/Oct. in the range 0.3 to 3 KHz and limits the signals outside this range. Further the signal is fed to the telephone output amplifier U6/2-6 and Q6-6. From the telephone output the signal is fed through the VOLUME CONTROL circuit U6-6 and the AL POWER AMP. The DC current in the differential amplifier in the VOLUME CONTROL is controlled by the transistor between pins 9, 10 and 11. The attenuation will be minimum when the current through the transistor between pins 3, 4 and 5 is maximum, and this is the condition when the outputs B1-B4 on the latch U4-6 is high (display reading will be 15). In that case the voltage on pin 4 of the differential amplifier will be the same as on pin 2. The D/A converter R131-6 to R134-6 is together with the resistor R128-6 functioning as a voltage divider. With all the outputs B1 - B4 at 0V the voltage between pin 4 and pin 2 will be approx. 200 Ms. This means that the current through the transistor between pins 3, 4 and 5 will be minimum and the signal will be attenuated about 60 dB. Resistor R125-6 and capacitor C58-6 prevents cross talk from the supply voltage to the output of the attenuator.

The AF signal from the receiver is also led through the ‘AF from RX Buffer’ to the Handset Key Connector. The buffer is a common emitter amplifier with emitter resistance securing a low output impedance and the signal amplitude required for compatibility with other S.P. RADIO products. This circuit consists of C77-6 - C79-6, Q19-6 and R157-6 - R162-6. The variable resistor R12-6 is used for adjusting gain and does in conjunction with C78-6 and R159-6 assure a correct cutoff frequency for the amplifier.

2.6.12 SELCALL

The input to the selcall is taken from the telephone output. The signal is first amplified and limited in U3/1-6. Then it passes the band pass filter and after this it is rectified and compared with a reference level in the comparator U15/1-6. 2.1 MHz is divided in the programmable counter U18-6. The output of this is divided by 2 and turned into a square wave in the flip-flop U12/1-6. The outputs of the flip-flops are connected to the switches U13-6. The frequency at which the switches around the capacitors C29-6 and C30-6 are working determines the resonance frequency of the filter. Thus by changing the dividing figure to U18-6 it is possible to change the resonance frequency of the filter. With R63-6 it is possible to adjust the resonance frequency of the filter (see the adjustment procedure).

Figure number	$f_{nominal}$ (Hz)	IC608 input 6543210	f_{clock} (Hz)	$f_{resonance}$ (Hz)
1	1124	1010001	12963	1127
2	1197	1001100	13816	1201
3	1275	1001000	14583	1268
4	1358	1000011	15672	1363
5	1446	0111111	16667	1449
6	1540	0111011	17797	1548
7	1640	0111000	18750	1630
8	1747	0110100	20192	1756
9	1860	0110001	21429	1863
0	1981	0101110	22826	1985
R	2110	0101011	24419	2123

When the radio is switched on the dividing figure corresponding to the first figure in the selcall number is put on port A on the µC which is connected to the input of U18-6. If the correct tone is received the output of the comparator U15/1-6 goes low. This output is connected to the µC's INT-pin. When the tone disappears again the µC will put out the dividing figure corresponding to the next figure in the selcall number. If all five tones are received correctly then the µC will send a message on the serial interface to the keyboard unit, turn on the selcall relay RE2-9 (on the filter unit), and send out an alarm tone from PC1 via the volume control and power amp. to the loudspeaker. The alarm tone lasts for 10 seconds after an individual call and after an all call it lasts until the selcall is reset. If the SELCALL TEST button is activated the alarm circuits and indicators will be tested.

2.6.13 THE EEPROM

The EEPROM contains an address/opcode register, a data I/O register, a memory array, an internal high voltage generator (V_{pp}) and some decoding logic. The Serial Data Clock (CK) is fed from PC7 on the µC and all communication starts with the µC setting PC5 thus enabling the Chip Select (CS) on the eeprom (U8-6). Instructions to U8-6 consists of a dummy 1, a 2 bit opcode, an 8 bit address and for some instructions also a 16 bit data word. When the opcode is 00 the 2 first bits in the address serve as an extended opcode.

INSTRUCTION SET FOR THE EEPROM (NMC93C56):

Instruction	Op code	Address	Data	Comment
READ	10	A7-A0		Reads data at specified address
EWEN	0	11XXXXXX		Write enable, must precede all programming modes
ERASE	11	A7-A0		Erase register A7-A0
ERAL	0	10XXXXXX		Erase all registers
WRITE	1	A7-A0	D15-D0	Writes reg if address unprotected
WRAL	0	01XXXXXX	D15-D0	Writes all registers. Valid only when Protect Reg is cleared
EWDS	0	00XXXXXX		Disables all programming instructions

READ:
After a Read instruction is received, the instruction and address are decoded, followed by data transfer from the selected memory register. A dummy 0 precedes the 16-bit data output string. Output data changes are initiated by a low to high trasition of the SK clock.

WRITE:
The Write operation is followed by 16 bits of data to be written to the specified address. CS must then be brought low before the next rising edge of the SK clock to initiate the self-timed programming cycle. D0 indicates the ready state (1/0 => ready/busy) the chip is ready for another instruction.

2.6.14 COMMUNICATION BETWEEN THE TWO MICROCOMPUTERS

The transmission of information between the 2 µC's takes place on a serial bus similar to a RS232C serial interface. Each byte consists of 8 bits of information, a start-, a stop-, and a parity bit. Odd parity is being used and the transmission speed is 2400 Baud but only one byte will be transferred in each period of 10 mS. Transmission can only take place when the DTR (PD1) is high. The µC on the KEYBOARD UNIT will take this line high once every 10 mS.

Transmission from U19-6 to U9-7 Transmission is allowed on the ROD line (PC4) as soon as DTR is high independent of the level of RTS. U9-7 will keep DTR high as long as it is receiving a byte.

Transmission from U9-7 to U19-6 U9-7 will set RTS (PD6 on U19-6) to a high level at the same time as it sets DTR high. If U19-6 has nothing to transmit it will answer by setting CUTS (PC6) to a high level as soon as it is ready to receive. After U9-7 has received the ready signal it will start transmission on the TXD line (PD0 on U19-6). The DTR, RTS and CTS will be kept high as long as the transmission takes place.

2.6.15 THE KEY-FUNCTION

When the transmitter is keyed the input PD2 on the Interface µC is put to a high level by the Keyboard µC assuming that TX is allowed, TX can be prohibited when the RT2047 is operated as a slave over the SP VHF Bus (Described in section 2.7.5 The SP VHF Bus). If the radio is tuned on a simplex channel! the AF is muted by setting the output PB4 to a high level. Then the synthesizer is moved 4.6 MHz upwards. Then the TX-VCO is turned on by setting PB3 high and after approx. 15 mS also the TX-BUFFER on (PB1 high) and after further 60 mS the PA-REGULATOR is turned on by setting PB0 and PB5 high. If reduced power is selected PB5 will be low. When the key is released the PA-REGULATOR is turned off first. After approx. 15 mS the TX-BUFFER is turned off, and after further 45 mS the TX-VCO is turned off. If the set is in a simplex channel the synthesizer is moved 4.6 MHz back again, and the AF is turned on.

2.6.16 THE MICROCOMPUTER

The µC is held in reset by a low voltage on the RESET input pin. As long as the µC is in reset it is inactive and all ports are configured as input pins. The 10V-SENSOR secures that the capacitor C54-6 cannot be charged before the 10V supply is higher than approx. 8V. The 5V is checked internally. When the voltage on the reset pin is above the internal comparator level the µC starts. First all pins on PA, PB, and PC are configured as outputs. PB4, PB6, PC2, PC4 and PC5 to high level and the rest to low level. Then the µC reads the address range from 64 to 0F in the EEPROM U8-6. If there is an error in the range from 64 to 77 the µC will transmit an "E0" message to the display and go to test mode. If there is an error in the address range from 78 to 0F it will always initiate with channel 16, volume level at Pos. 5 and the squelch level at 4. If the first test is passed the µC will send information to the VOL/SQ latch (U4-6) and the RX-synthesizer and also initiate the selcall. Then the µC supervises the KEY-input (PD2), the squelsh detector (PD7), the selcall detector (INT pin), the RTS-input (PD6), and the battery sensor. (See the appropriate sections).

COMPONENT LOCATION INTERFACE UNIT MODULE 6/600

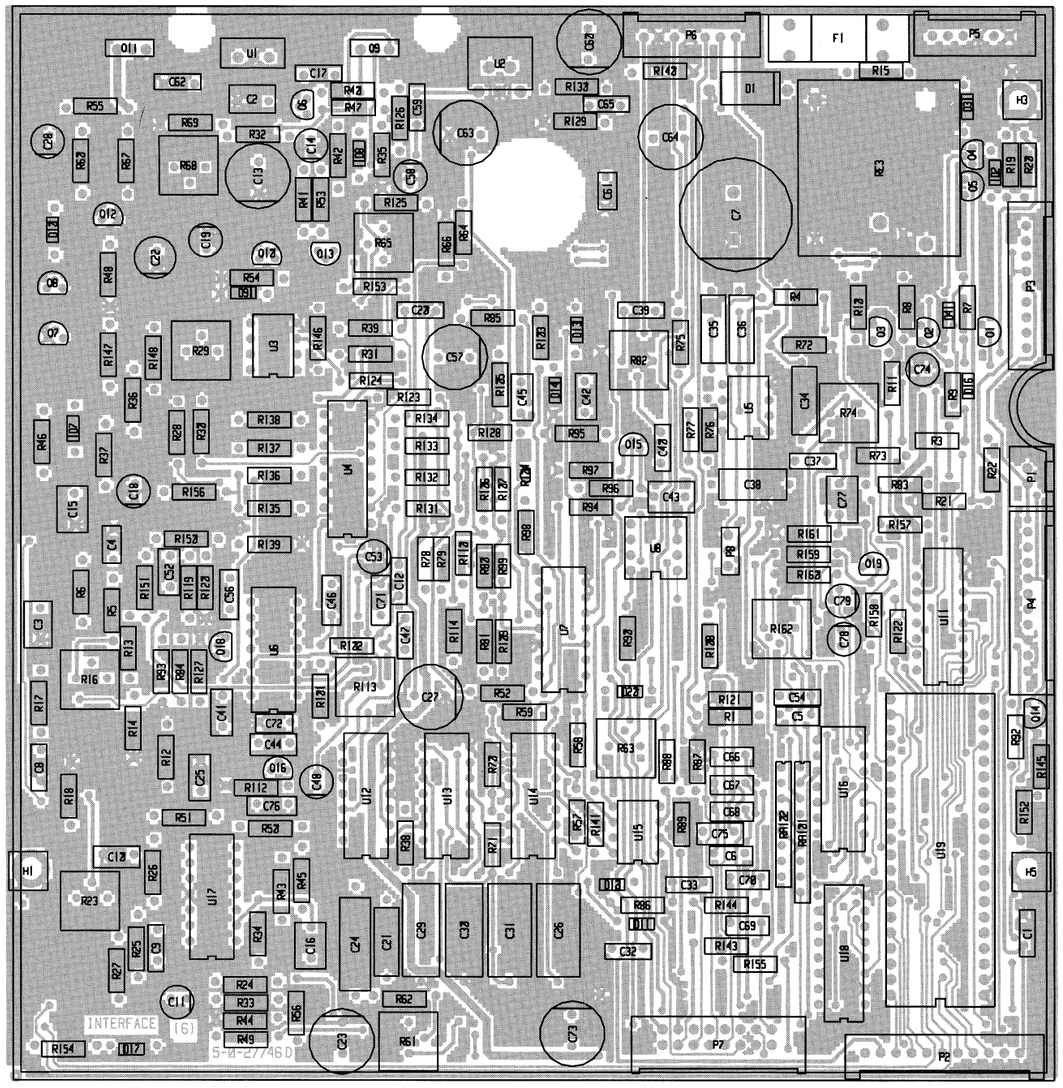

View from component side with upper side tracks.

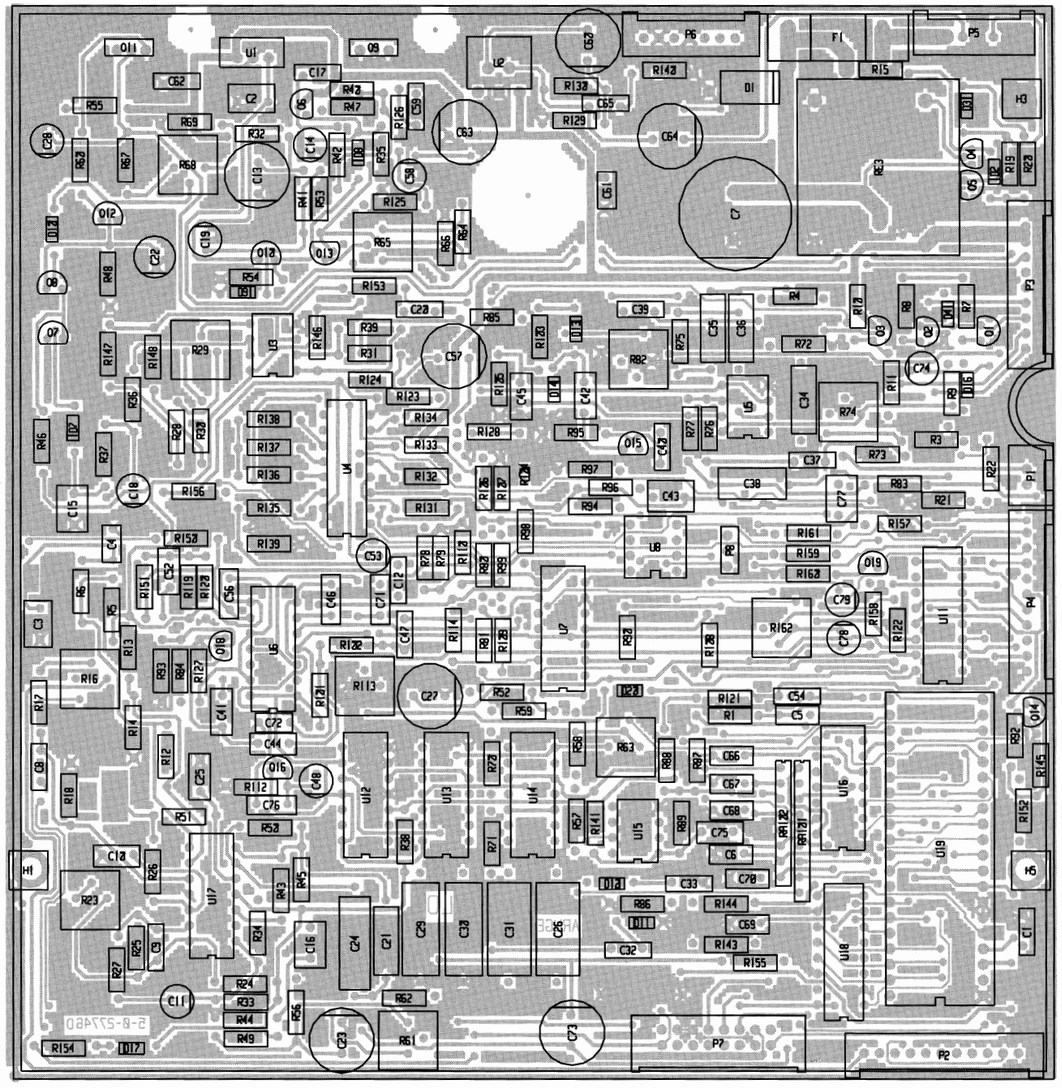

View from component side with lower side tracks.

27746D

DIAGRAM INTERFACE UNIT MODULE 6/600

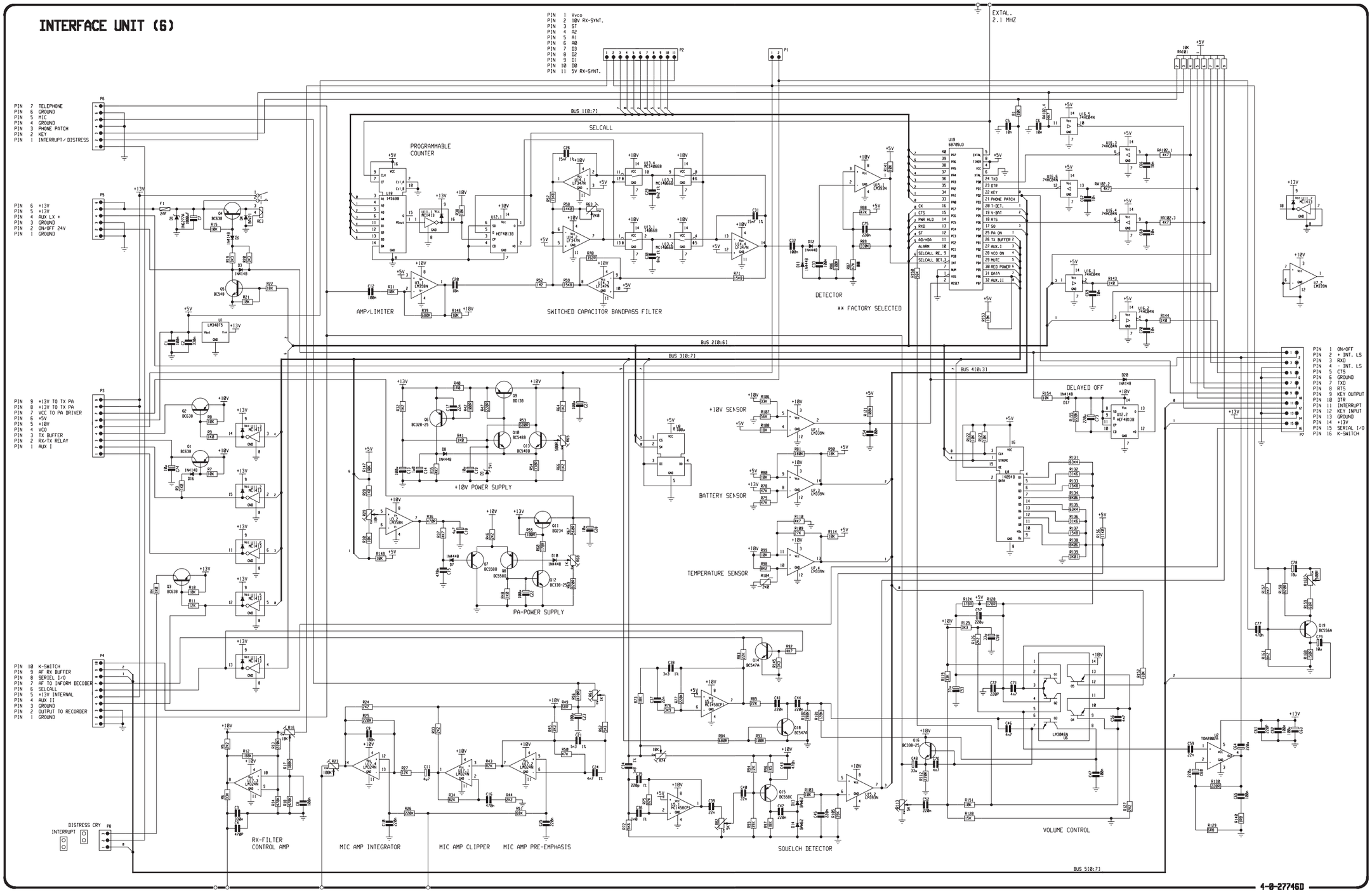

This diagram is valid for PCB rev. 27746D.

2.7 KEYBOARD UNIT MODULE 7/700

2.7.1 DISPLAY

The LCD-display is static driven with an 50 Hz AC signal measured with reference to the back plane input (BP pin numbers 1, 27, 28, 54). A segment that is off always has the same voltage as the BP. The latches (U1-7 - U6-7) is loaded serially from the µC. Every 10 mS a strobe pulse is sent to the latches, and the content of the internal shift register in the latches is loaded into the output latches. Afterwards new information is shifted into the shift registers so the content is ready when the next 10 msec cycle has passed.

2.7.2 KEYBOARD

The keyboard is scanned once every 10 mS. First PA4 is turned low, and PAO- PA3 are turned into inputs. Afterwards PCO-PC3 are read, and if there is a low level on one of these pins a push button is activated. If they are all high PA3 is turned low and the others to input pins, and PCO-PC3 are read once more and so on. When finished PAO is left at low level.

2.7.3 PANEL ILLUMINATION

The LEDs are driven with a constant current generator. With PB1 at OV the current generators are on and with PB1 at 5V they are switched off.

2.7.4 THE MICROCOMPUTER

The µC uses the internal clock-generator and a ceramic resonator. The clock frequency is approx. 4 MHz. The µC takes care of the dual watch and scanning functions and the keyboard and display. This means that when scanning, the µC requests a new channel every 100 mS if it has not received a message telling that there is a carrier. Concerning the serial interface see section 2.6.14 COMMUNICATION BETWEEN THE TWO µC'S. When the radio is on and the ON/OFF switch is activated and released again the µC will be interrupted. The µC will then transmit a message to U19-6 to tell it to switch off. C18-7 and R17-7 is an external pullup of the RESET*-pin and keeps the RESET* set for 0.5 second after the set is turned off allowing time for transferring the startup table to the Interface µC. The interface µC then stores this information in the eeprom before the set is finally turned off.

2.7.5 THE SP VHF-BUS

The keyboard µC also handles the communication with external units on the SP VHF Bus. The structure is a digital Command/Response time division multi-pleasing data bus, with an interrupt extension. The interrupt signal is located on pin 23 (PC5) on the µC and the serial I/O signals on pin 29/30 (PD0/PD1). The RT2047 will always behave as a slave in the communication but can initiate a dialogue with the external unit by setting the interrupt pin. A communication sequence will typically be initiated by the external unit (the master) with an Address Word specifying what slave it wants to contact, a Command Code or a Transfer Code ordering the slave to execute a command or to transfer information to the master and finally a number of Data Words. The number of data Words can vary from 0 to 10. The answer from the slave (RT2047) could consists of a Status Word, specifying what slave the answer came from and a Response Word confirming that the command has been executed, optionally a Message Code and a number of Data Words corresponding to the data transfer requested by the master. The answer from the slave could also consist of a Status Word with its Busy-bit set and a Response Word confirming that the command was received. In this case the slave will set the interrupt pin when it's ready and the following communication will confirm that the command was executed or optionally give the data transfer requested. There are several other types of communication. For these and for specifics we refer to the documentation on the SP VHF-BUS.

Q5-7, R18-7 and R19-7 is the Interrupt driver circuit and U10/2-7, Q4-7, C17-7, R14-7 - 16-7 and R22/1-7 - R22/4-7 forms the serial interface circuit. This circuit transforms the µC's two-wire serial communication interface (SCI) into the one-wire SCI required for communication with external units. Data output from the µC can be detected on pin PD1 and data input on pin PD0. The one-wire asynchronized signal can be measured on R15-7 or P1/15-7.

2.7.6 DUAL WATCH

When the radio is dual-watching the receiver is watching CH16 for 100 mS once every 1.5 sec. If there is a carrier on CH16 the receiver will stay there until the carrier disappears. When there is no carrier on CH16 only the number of the primary channel is shown in the display along with the DW-symbol. The µC on the keyboard is taking care of the timing and is requesting every change of channel.

2.7.7 SCANNING

When the radio is scanning the radio is listening to the channels in the scanning table for 100 mS each. CH16 is being watched for 100 mS between every change of channel. If there is a carrier the receiver will start dual watching on this channel as long as the SCAN TIME is set. There is built in hold time of 1.5 second so the receiver will stay there for 1.5 see after the carrier has disappeared.

COMPONENT LOCATION KEYBOARD UNIT MODULE 7/700

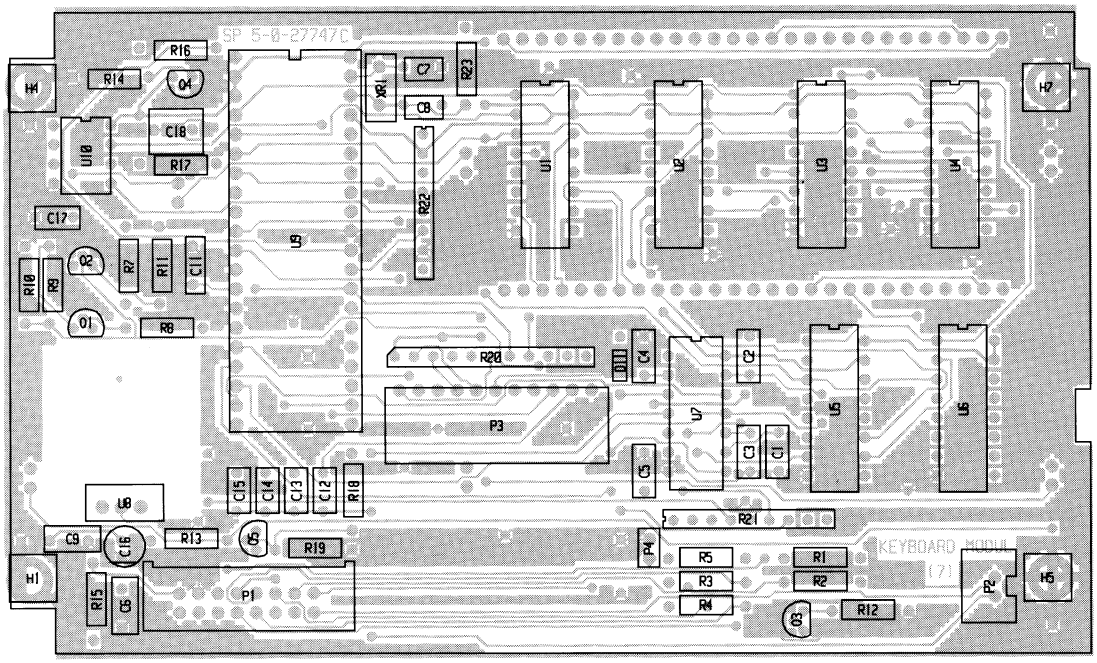

View from component side with upper side tracks.

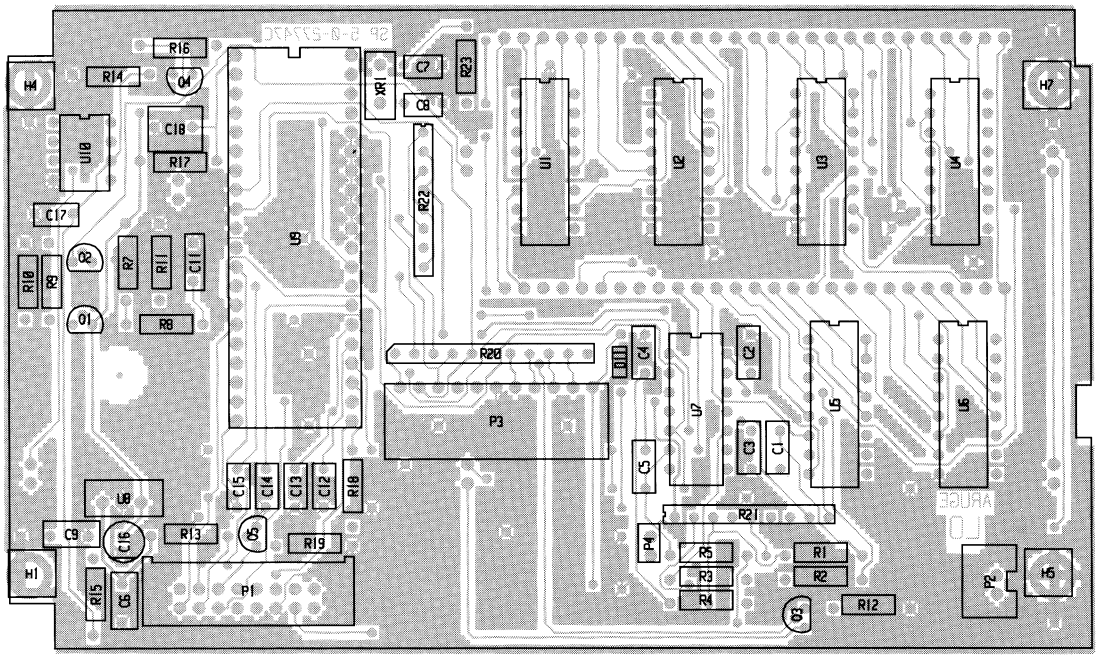

View from component side with lower side tracks.

27747C

DIAGRAM KEYBOARD UNIT MODULE 7/700

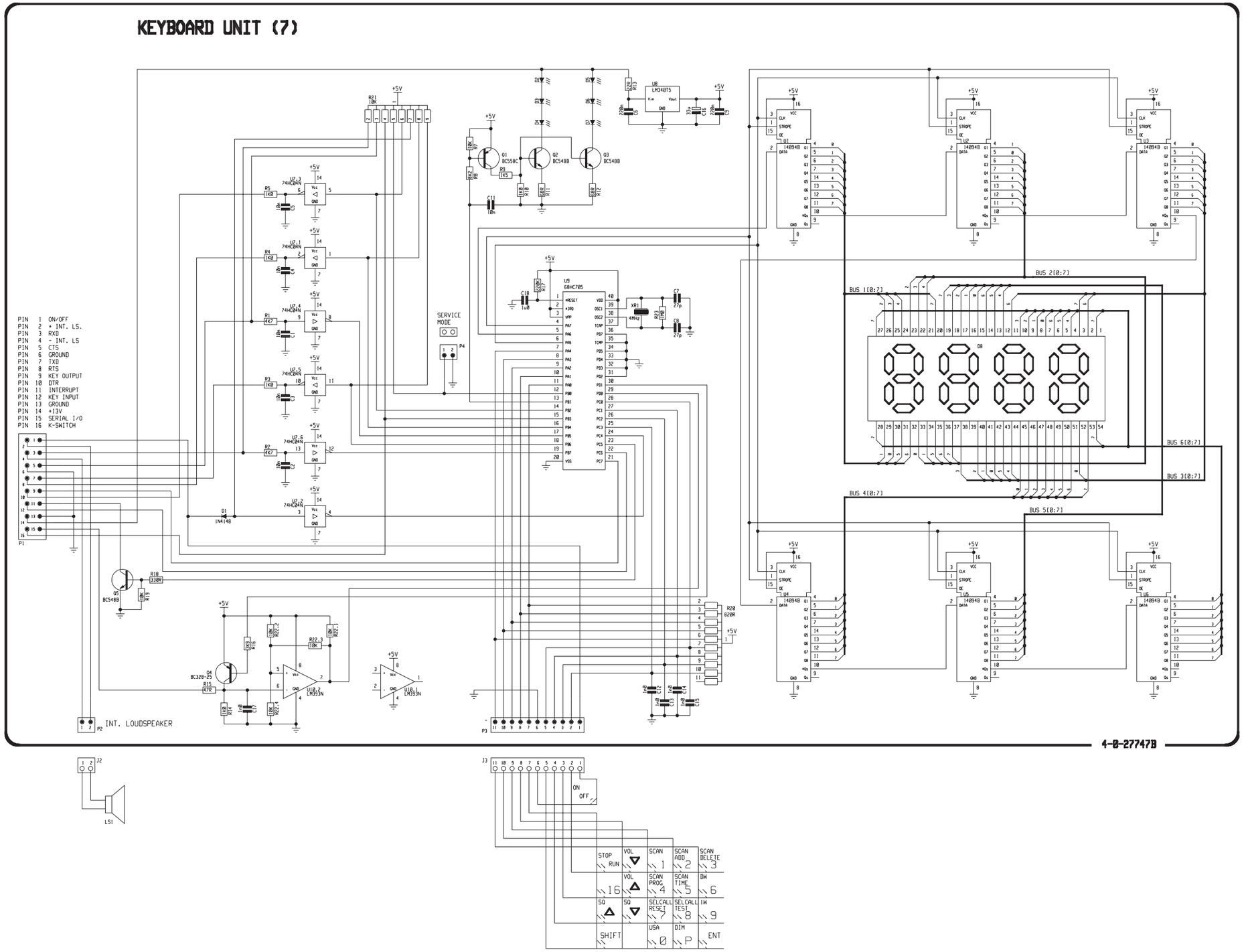

This diagram is valid for PCB rev. 27747C.

2.8 DUPLEX FILTER MODULE 800

With a duplex filter, DF801, placed in the station it is possible to operate in full duplex mode with only one antenna installed.

The duplex filter consists of 7 cavities, three in the Rx-section and four in the Tx-section.

The cavities in the Tx-section are stagger tuned. Two cavities (D-E) are suppressing the noise in the receiving band 160.625 MHz - 162.025 MHz with Minimal insertion loss in the transmission band.

The function of the other two cavities (F-G) is to provide a band stop filter within the image frequency band range of the duplex distance, 4.6 MHz: 151.425 MHz -152.825 MHz.

The cavities (A-B-C) in the Rx-section are stagger tuned. They are suppressing the transmitting frequencies with Mid. insertion loss in the receiving band.

See the plot of duplex filters frequency response below.

NB: The duplex filter is adjusted with special measuring equipment and should be adjusted by S.P. Radio A/S only.

TECHNICAL DATA FOR DUPLEX FILTER FOR VHF RT146 - RT2047.

TRANSMITTER	dB	RANGE MHz
Band-stop attenuation	-30	151.425 - 152.825
Band-stop attenuation	-47	156.025 - 157.425
Insertion loss. Max	1.6	-
Return loss. Mid	1.7	-

RECEIVER	dB	RANGE MHz
Band-stop attenuation	-60	160.625 - 162.025
Insertion loss. Max	1.5	-

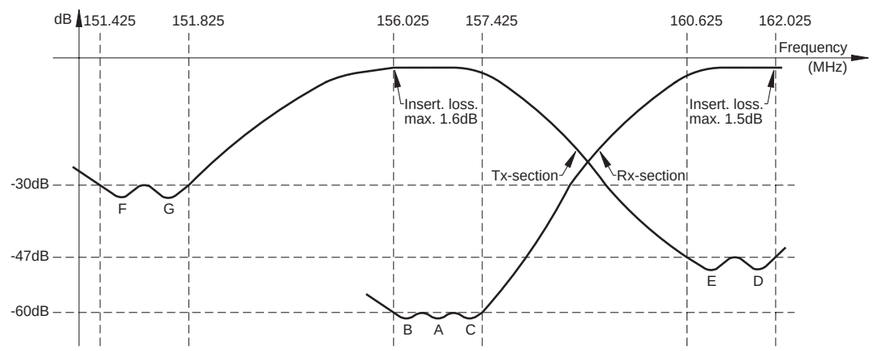

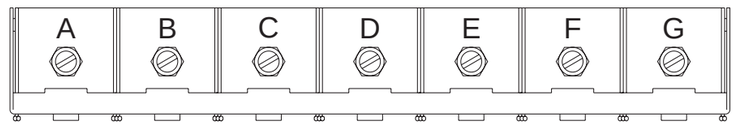

24902

2.9 FILTER UNIT MODULE 9/900

The function of the Filter unit is to protect the set against RF interference from equipment installed near the set. The two options AUX II and SELCALL RELAY requires the relays RE1-9 and RE2-9. These relays are not a standard feature and can, if needed, be acquired from SP-Radio (order number 21.300).

The function of jumper P34-9 is described in part I, section 2.9 Special Options.

COMPONENT LOCATION FILTER UNIT MODULE 9/900

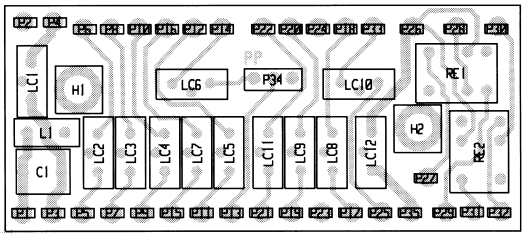

View from component side with upper side tracks.

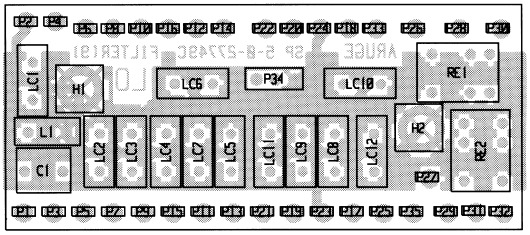

View from component side with lower side tracks.

27749C

DIAGRAM FILTER UNIT MODULE 9/900

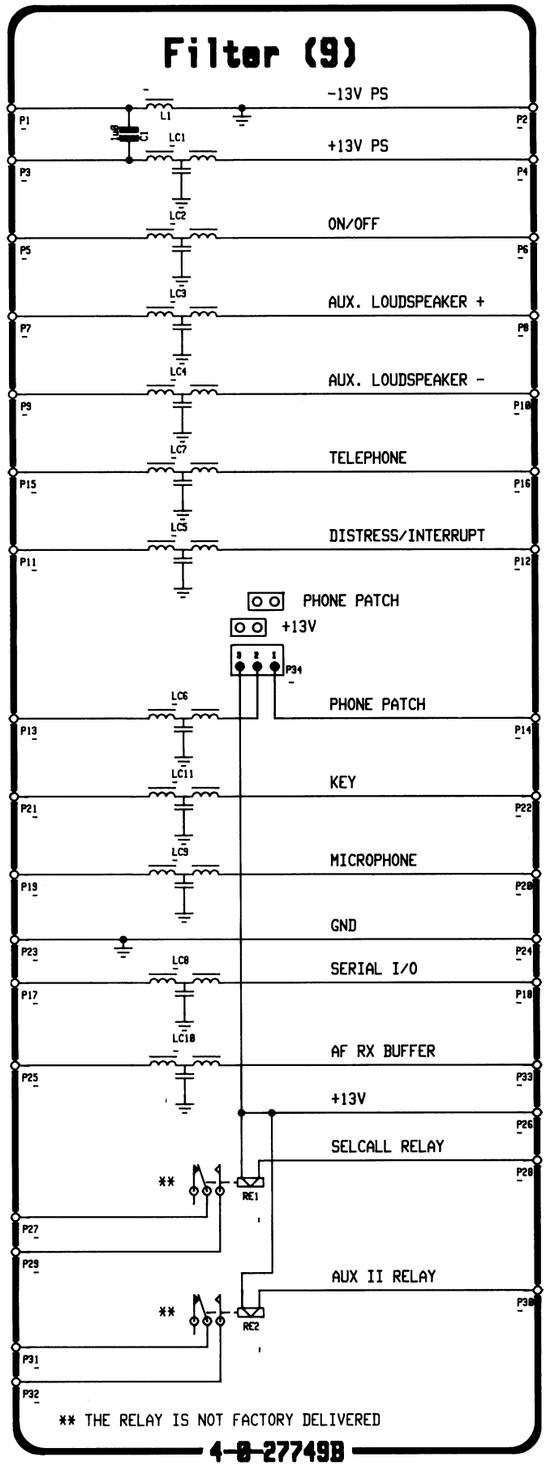

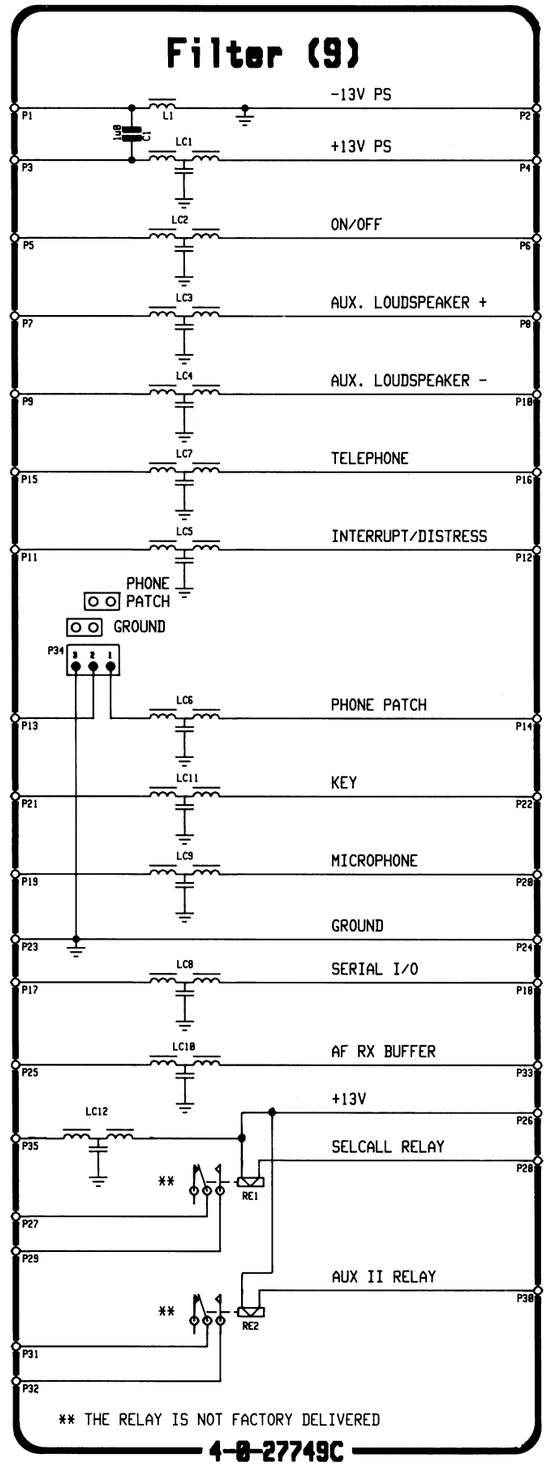

This diagram is valid for PCB rev. 27749C.

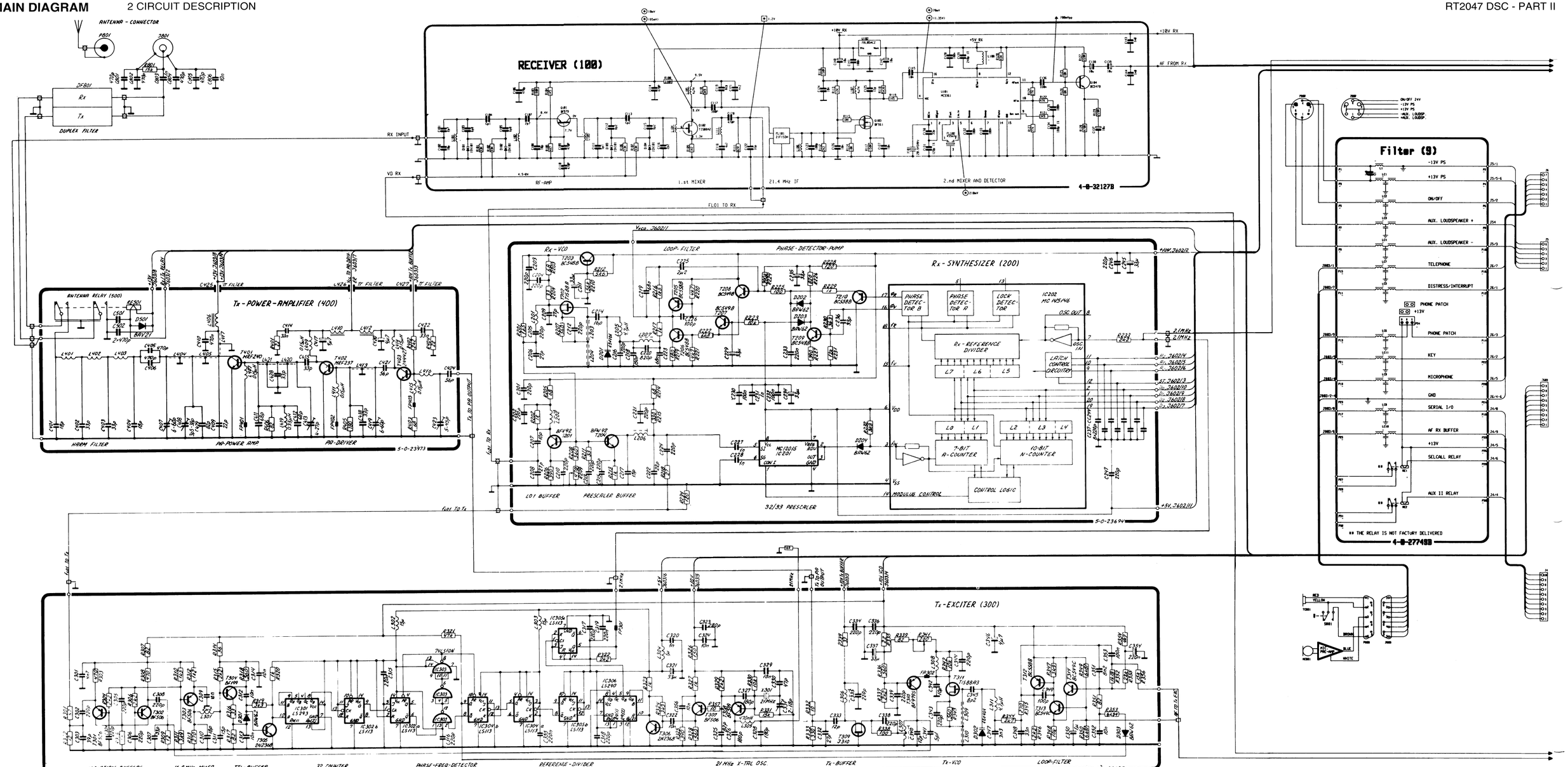
ANTENNA - CONNECTOR
DUPLEX FILTER
RECEIVER (100)
RF-AMP
1.st MIXER
21.4 MHz IF
2.nd MIXER AND DETECTOR
4-0-32127B
RX INPUT
VO RX
FLO1 TO RX
AF FROM RX
Tx-POWER-AMPLIFIER (400)
ANTENNA RELAY (500)
HARM FILTER
PA-POWER AMP
PA-DRIVER
5-0-23973
Rx-VCO
LOOP-FILTER
PHASE-DETECTOR-PUMP
Rx-SYNTHESIZER (200)
Rx-REFERENCE DIVIDER
LATCH CONTROL CIRCUITRY
7-BIT A-COUNTER
10-BIT N-COUNTER
CONTROL LOGIC
LO1 BUFFER
PRESCALER BUFFER
32/33 PRESCALER
5-0-23694
Filter (9)
-13V PS
+13V PS
ON/OFF
AUX. LOUDSPEAKER +
AUX. LOUDSPEAKER -
TELEPHONE
DISTRESS/INTERRUPT
PHONE PATCH
KEY
MICROPHONE
GND
SERIAL I/O
AF RX BUFFER
SELCALL RELAY
AUX II RELAY
** THE RELAY IS NOT FACTURY DELIVERED
4-0-27498B
Tx-EXCITER (300)
ISOLATION-BUFFERS
16.8MHz MIXER
TTL-BUFFER
32 COUNTER
PHASE-FREQ-DETECTOR
REFERENCE-DIVIDER
21MHz X-TAL OSC.
Tx-BUFFER
Tx-VCO
LOOP-FILTER
5-0-23695

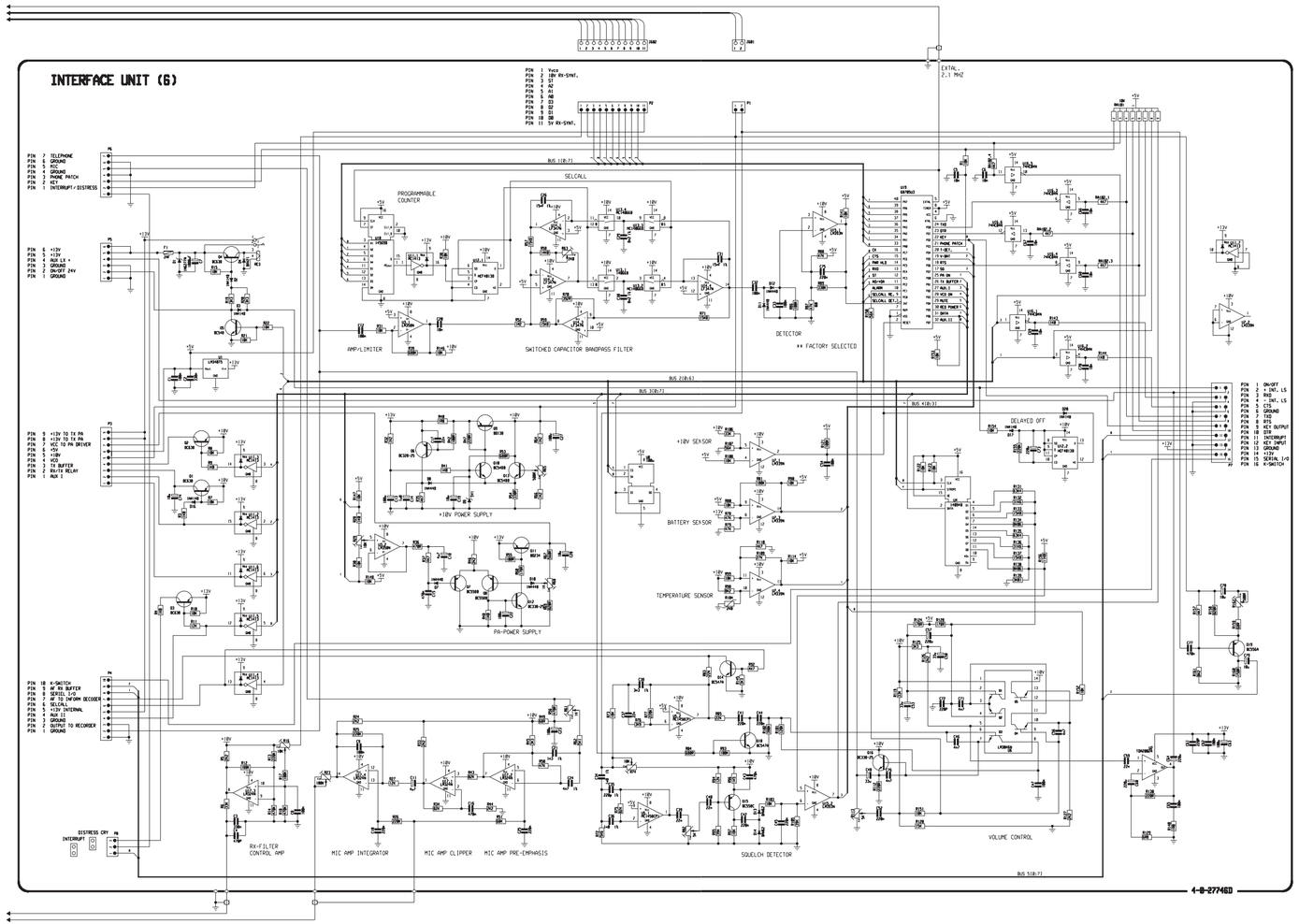
INTERFACE UNIT (6)
PIN 7 TELEPHONE
PIN 6 GROUND
PIN 5 MIC
PIN 4 GROUND
PIN 3 PHONE PATCH
PIN 2 KEY
PIN 1 INTERRUPT/ DISTRESS
PIN 6 +13V
PIN 5 +13V
PIN 4 AUX LX +
PIN 3 GROUND
PIN 2 ON-OFF 24V
PIN 1 GROUND
PIN 9 +13V TO TX PA
PIN 8 +13V TO TX PA
PIN 7 +13V TO PA DRIVER
PIN 6 +5V
PIN 5 +18V
PIN 4 VCO
PIN 3 TX BUFFER
PIN 2 BUFF RELAY
PIN 1 AUX I
PIN 10 K-SWITCH
PIN 9 RF RX BUFFER
PIN 8 SQUELCH
PIN 7 SELCALL INFORM DECODER
PIN 6 SELCALL
PIN 5 +13V INTERNAL
PIN 4 AUX II
PIN 3 GROUND
PIN 2 OUTPUT TO RECORDER
PIN 1 GROUND
DISTRESS CRY
INTERRUPT
PIN 1 Vcc
PIN 2 18V RX-SNT.
PIN 3 S7
PIN 4 A2
PIN 5 A1
PIN 6 A0
PIN 7 D3
PIN 8 D2
PIN 9 D1
PIN 10 D0
PIN 11 5V RX-SNT.
EXTAL.
2.1 MHZ
BUS 1(B:7)
SELCALL
PROGRAMMABLE
COUNTER
AMP/LIMITER
SWITCHED CAPACITOR BANDPASS FILTER
DETECTOR
** FACTORY SELECTED
BUS 2(B:6)
BUS 3(B:7)
BUS 4(B:7)
DELAYED OFF
+18V SENSOR
BATTERY SENSOR
TEMPERATURE SENSOR
+18V POWER SUPPLY
PA-POWER SUPPLY
RX-FILTER
CONTROL AMP
MIC AMP INTEGRATOR
MIC AMP CLIPPER
MIC AMP PRE-EMPHASIS
SQUELCH DETECTOR
VOLUME CONTROL
BUS 5(B:7)
PIN 1 ON-OFF
PIN 2 + INT. LS.
PIN 3 RXD
PIN 4 - INT. LS
PIN 5 CTS
PIN 6 GROUND
PIN 7 TXD
PIN 8 RTS
PIN 9 KEY OUTPUT
PIN 10 ESW
PIN 11 INTERRUPT
PIN 12 KEY INPUT
PIN 13 GROUND
PIN 14 +13V
PIN 15 SERIAL I/O
PIN 16 K-SWITCH
4-B-27746D

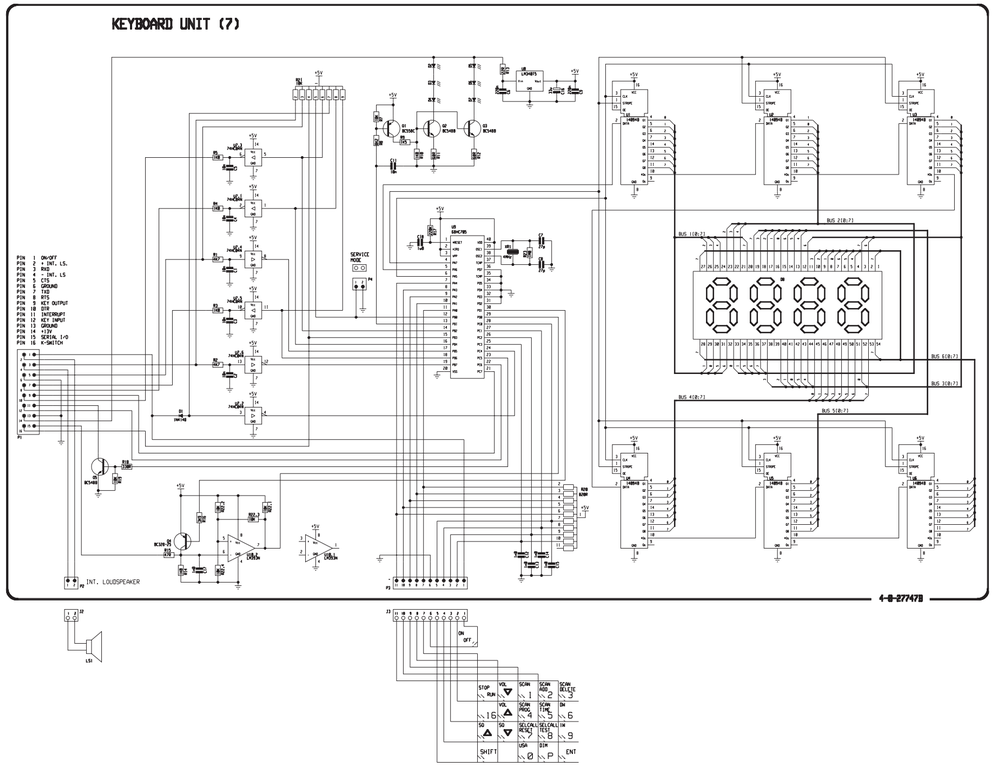
KEYBOARD UNIT (7)
PIN 1 ON-OFF
PIN 2 + INT. LS.
PIN 3 RXD
PIN 4 - INT. LS
PIN 5 CTS
PIN 6 GROUND
PIN 7 TXD
PIN 8 RTS
PIN 9 KEY OUTPUT
PIN 10 ESW
PIN 11 INTERRUPT
PIN 12 KEY INPUT
PIN 13 GROUND
PIN 14 +13V
PIN 15 SERIAL I/O
PIN 16 K-SWITCH
SERVICE
MODE
INT. LOUDSPEAKER
BUS 1(B:7)
BUS 2(B:7)
BUS 3(B:7)
BUS 4(B:7)
BUS 5(B:7)
BUS 6(B:7)
4-B-27747B

ON
OFF
STOP
RUN
VOL
SCAN
SCAN
DELETE
SQ
SELCALL
SELCALL
SHIFT
ENT

32162

2.11 MICROTELEPHONE INSTALLATION

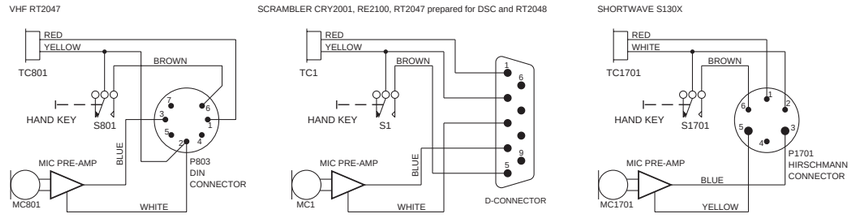

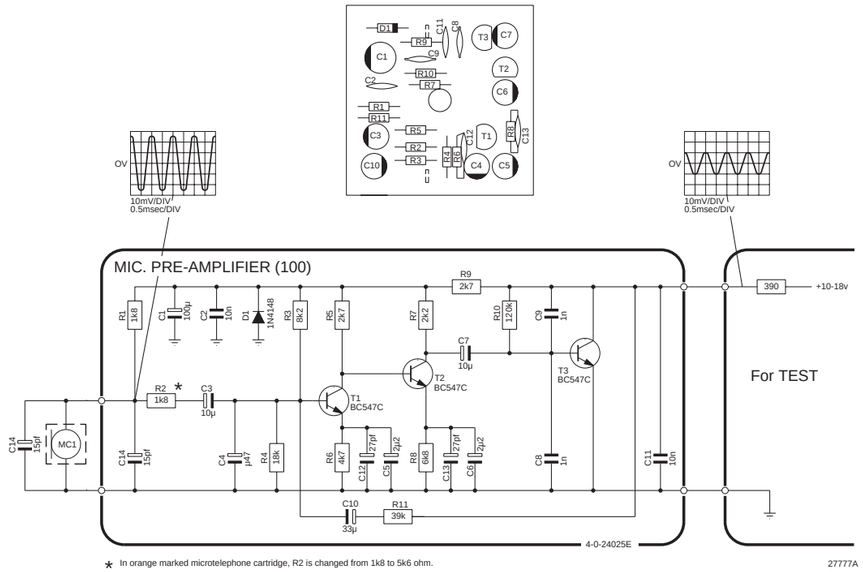

* In orange marked microtelephone cartridge, R2 is changed from 1k8 to 5k6 ohm.

MICROTELEPHONE WITH ELECTRET MIC. AMP.			ECI A/S	5-0-24025D	60087
POSITION	DESCRIPTION		MANUFACTOR	TYPE	PART NO.
C1	CAPACITOR ELECTROLYTIC	100uF 20% 10VDC	ERO	EKI 00 BB 310 C M0E	14.607
C2	CAPACITOR CERAMIC	10nF -20/+80% CL2 50VDC	NKE	DT 350 758L F 103 Z 50V FLAT PACK	15.170
C3	CAPACITOR ELECTROLYTIC	10uF 20% 35VDC	ERO	EKI 00 AA 210 F M0E	14.512
C4	CAPACITOR ELECTROLYTIC	0.47uF 20% 50VDC	ERO	EKI 00 AA 047 H M0E	14.504
C5	CAPACITOR ELECTROLYTIC	2u2F 20% 50VDC	ERO	EKI 00 AA 122 H M0E	14.503
C6	CAPACITOR ELECTROLYTIC	2u2F 20% 50VDC	ERO	EKI 00 AA 122 H M0E	14.503
C7	CAPACITOR ELECTROLYTIC	10uF 20% 35VDC	ERO	EKI 00 AA 210 F M0E	14.512
C8	CAPACITOR CERAMIC	1nF 10% 100V	*PHILIPS	2222 630 19102	16.149
C9	CAPACITOR CERAMIC	1nF 10% 100V	*PHILIPS	2222 630 19102	16.149
C10	CAPACITOR ELECTROLYTIC	33uF 20% 16VDC	ERO	EKI 00 AA 233 D M0E	14.518
C11	CAPACITOR CERAMIC	10nF -20/+80% CL2 50VDC	NKE	DT 350 758L F 103 Z 50V FLAT PACK	15.170
D1	DIODE	1N4148 HIGH SPEED	PHILIPS	1N4148-143	25.131
MC1	MICROPHONE ELECTRET	ø9.7 x 6.7mm	PANASONIC	WM-0344BY	46.012
R1	RESISTOR MF	1k8 OHM 5% 0.33W	PHILIPS	2322 180 73182	02.478
R2	RESISTOR MF	1k8 OHM 5% 0.33W	PHILIPS	2322 180 73182	02.478
R3	RESISTOR MF	8k2 OHM 5% 0.33W	PHILIPS	2322 180 73822	02.494
R4	RESISTOR MF	18k OHM 5% 0.33W	PHILIPS	2322 180 73183	02.502
R5	RESISTOR MF	2k7 OHM 5% 0.33W	PHILIPS	2322 180 73272	02.482
R6	RESISTOR MF	4k7 OHM 5% 0.33W	PHILIPS	2322 180 73472	02.488
R7	RESISTOR MF	2k2 OHM 5% 0.33W	PHILIPS	2322 180 73222	02.480
R8	RESISTOR MF	6k8 OHM 5% 0.33W	PHILIPS	2322 180 73682	02.492
R9	RESISTOR MF	2k7 OHM 5% 0.33W	PHILIPS	2322 180 73272	02.482
R10	RESISTOR MF	120k OHM 5% 0.33W	PHILIPS	2322 180 73124	02.522
R11	RESISTOR MF	39k OHM 5% 0.33W	PHILIPS	2322 180 73393	02.510
S1	MICROSWITCH	E62-10H PDT	CHERRY	E62-10H PDT	44.025
T1	TRANSISTOR AF	NPN BC547C TO-92	PHILIPS	BC547C	28.068
T2	TRANSISTOR AF	NPN BC547C TO-92	PHILIPS	BC547C	28.068
T3	TRANSISTOR AF	NPN BC547C TO-92	PHILIPS	BC547C	28.068
TC1	TELEPHONE CARTRIDGE	200 OHMS	S.E.K. (KIRK)	T802 0113 2715	46.010

2.12 SPECIAL INSTALLATION WITH 2 MICROTELEPHONES

H2086 for scrambler CRY2001, RT2047 DSC, RT2048 and RE2100.
H2087 for VHF RT2047.

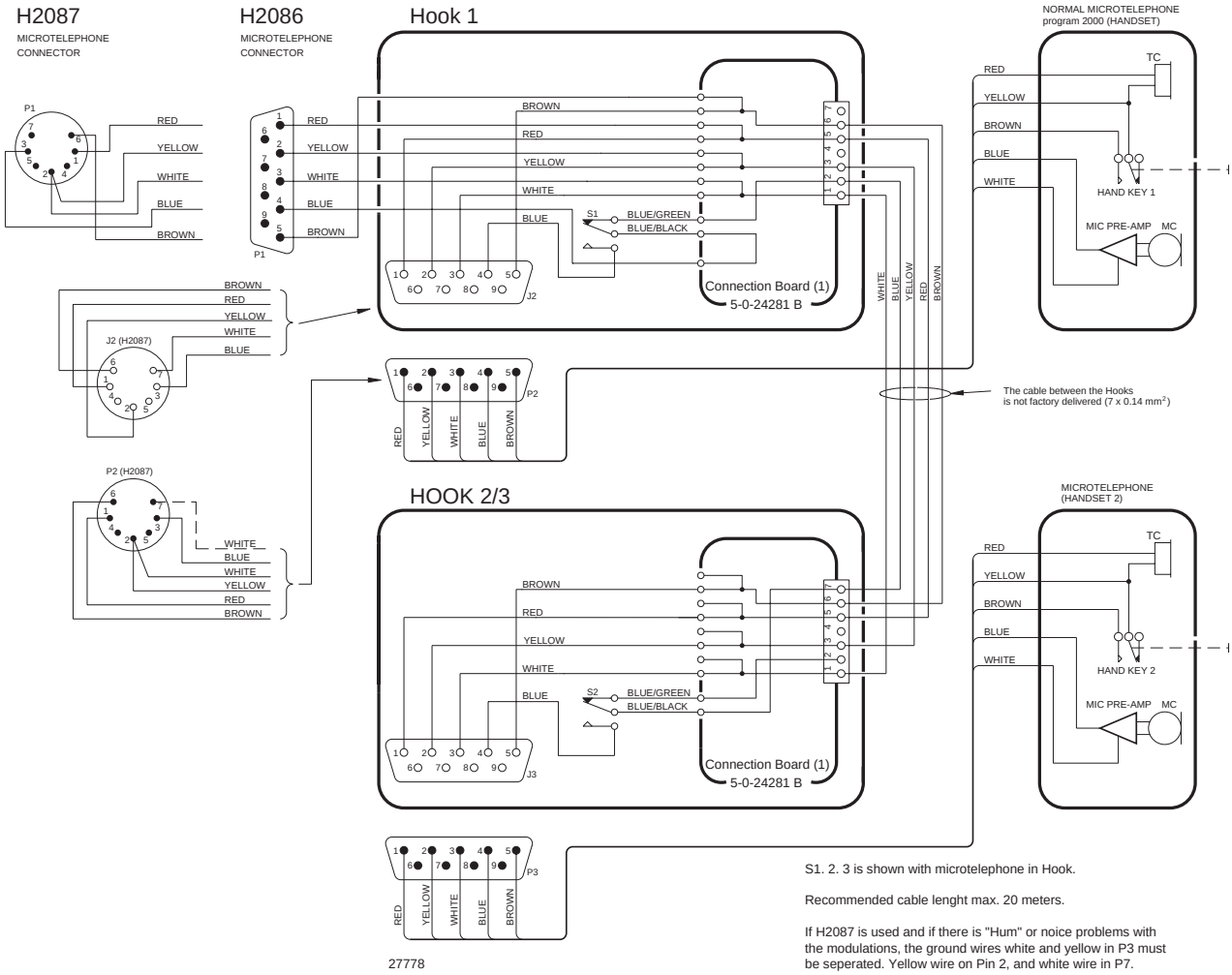

S1. 2. 3 is shown with microtelephone in Hook.

Recommended cable lenght max. 20 meters.

If H2087 is used and if there is "Hum" or noice problems with the modulations, the ground wires white and yellow in P3 must be seperated. Yellow wire on Pin 2, and white wire in P7.

2.13 SPECIAL INSTALLATION WITH 3 MICROTELEPHONES

H2088 for scrambler CRY2001, RT2047 DSC, RT2048 and RE2100.
H2089 for VHF RT2047.

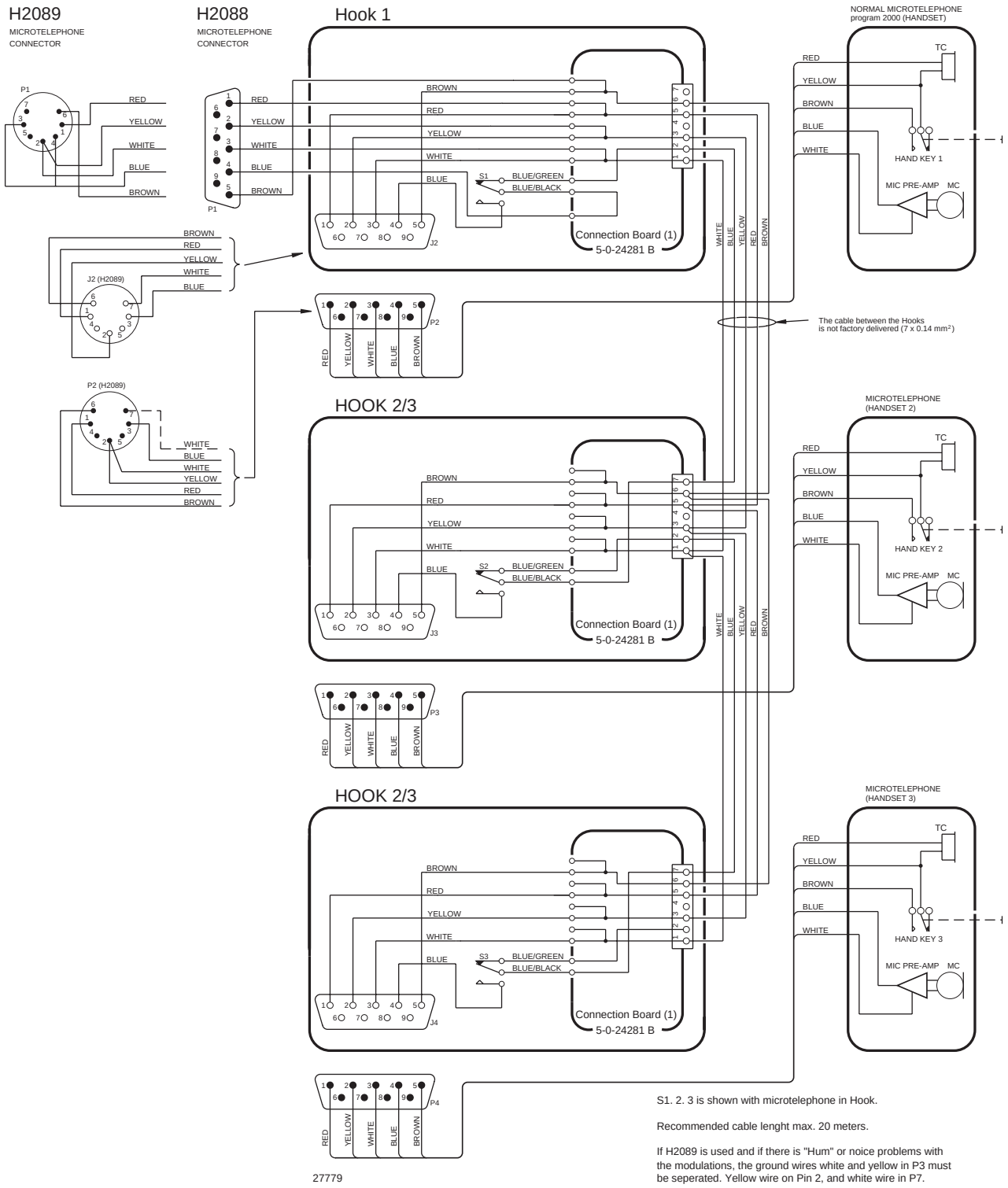

S1. 2. 3 is shown with microtelephone in Hook.

Recommended cable lenght max. 20 meters.

If H2089 is used and if there is "Hum" or noice problems with the modulations, the ground wires white and yellow in P3 must be seperated. Yellow wire on Pin 2, and white wire in P7.

2.14 MECHANICAL DIMENSIONS FOR HANDSET

MECHANICAL DIMENSIONS FOR HANDSET

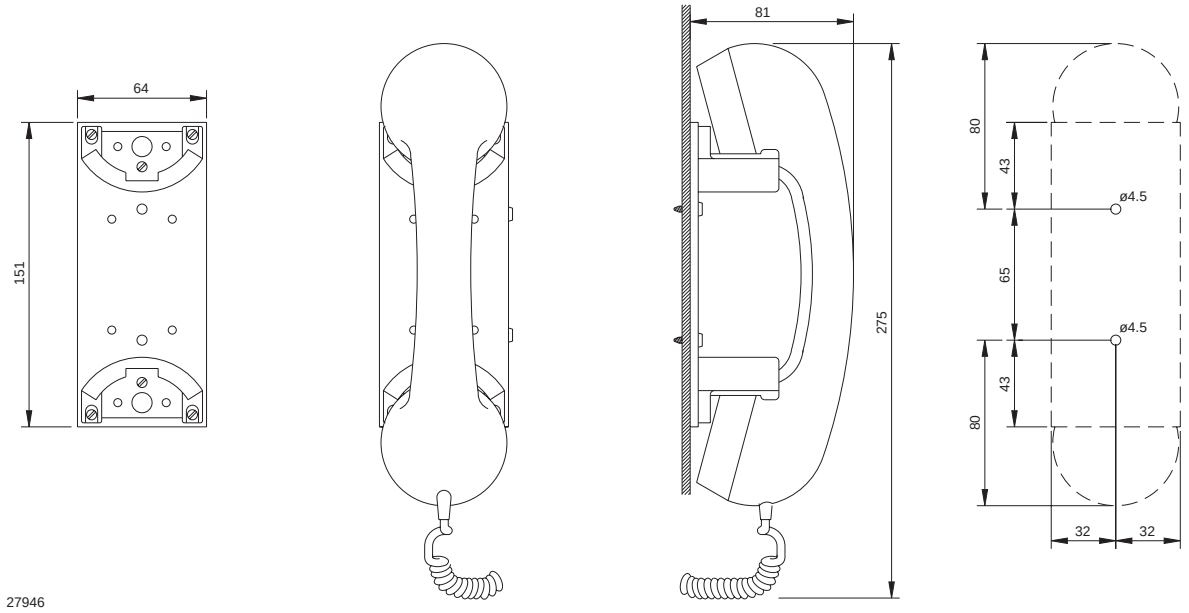

MECHANICAL DIMENSIONS FOR HANDSET HOLDER WITH MICROSWITCH

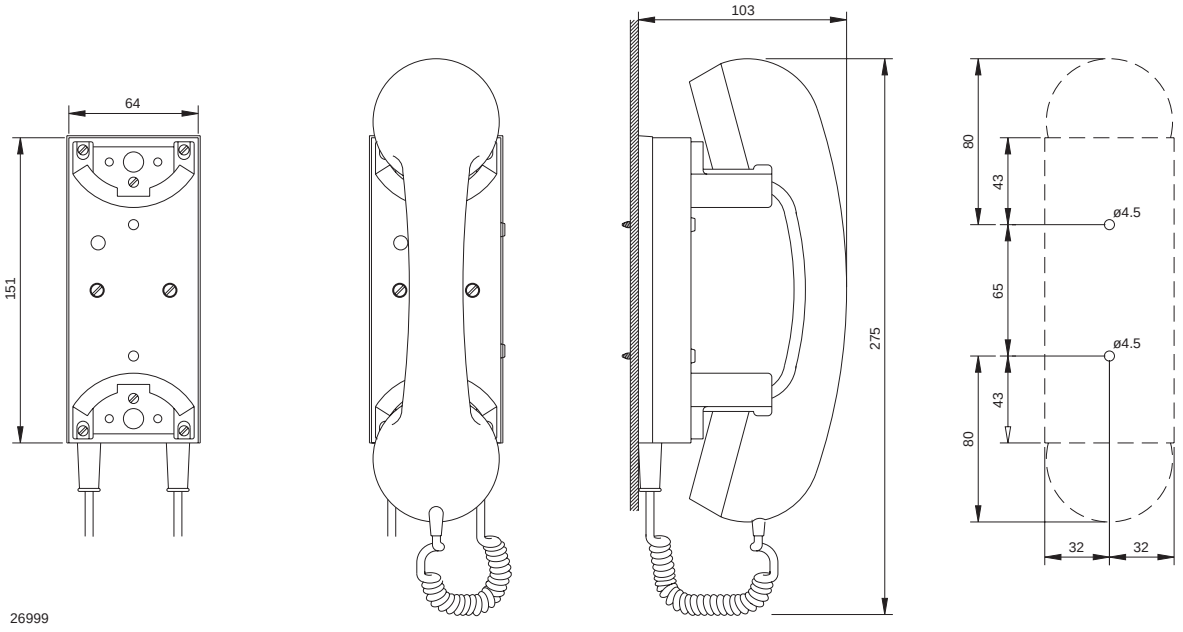

MECHANICAL DIMENSIONS FOR HANDSET

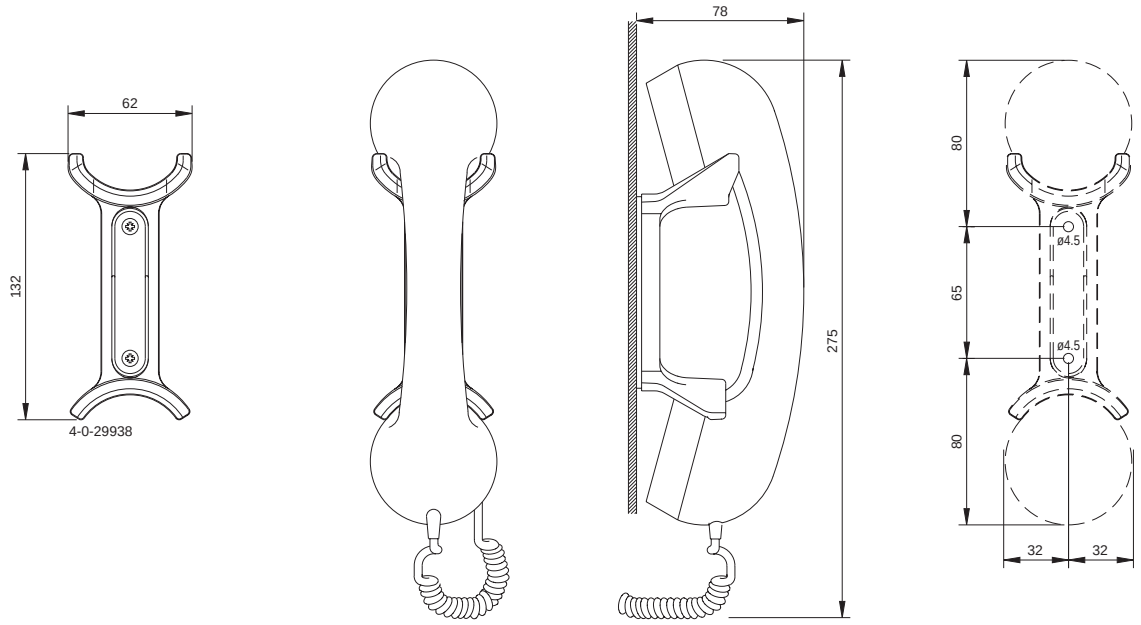

MECHANICAL DIMENSIONS FOR HANDSET HOLDER WITH MICROSWITCH

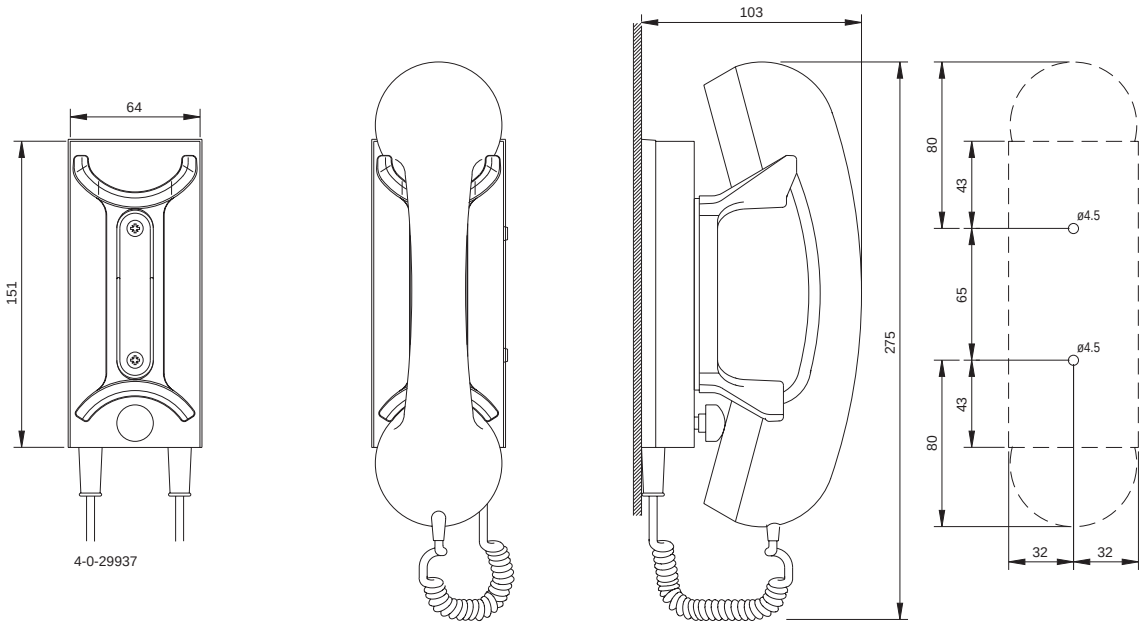

2.15 DC POWER SUPPLY N418

GENERAL DESCRIPTION
The power supply N418 is constructed for supplying a 13.2V VHF from a 24V DC system. In order to obtain high efficiency regulation is obtained by the switch mode principle.

TECHNICAL DATA:
The power supply N418 is controlled from the connected VHF unit by on/off.

Input voltage	16-32V DC
Output voltage	13.2V DC
Output current	Max. 7A DC
Operation temperature range	-15 - +55 °C
Switch frequency	Approx 40 KHz

2.15.1 PRINCIPLE OF OPERATION

The on/off information from the connected VHF unit is controlling the N418 via pin 4 of P201.
The regulation takes place after the forward principle, which means that during the “on time” of the switching element T202, the coil L105 is connected directly from the input to the output.

When switching element T202 is turned off the stored energy in L105 maintains the supply current to the output via diode D201.

Regulation of the output voltage takes place via pulse width regulation, which means that the “on time” (duty cycle) of the switching element T202 is controlled. The regulation gives long “on time” when the input voltage is low, a further decrease of input voltage allows the T202 to be on, continuously. If the input voltage is increased the “on time” is shortened.

In order to limit the rush in current during switching there’s a built in soft start, thus enabling a short “on time” for T202 immediately after the switching on, and afterwards the “on time” is slowly increased. Current limitation is established by sensing the voltage over the resistor R126. If the current is too high, the pulse width is shortened in order to reduce the output current.

2.15.2 CIRCUIT DESCRIPTION

When N418 is switched on R113 is connected to the negative terminal of the supply in the VHF and transistor T102 is on. IC101 starts functioning. The voltage level on pin 9 of IC101 controls the duty cycle and the voltage always starts from low level because C108 is discharged via transistor T101 every time the N418 is switched off.

Pin 16 of IC101 is a 5V reference voltage, which is divided down in R104, R105, and R106 and connected to pin 2 (the non-inverted input). Pin 1 of IC101 is connected to the output voltage via voltage divider R117 and R122, the two levels are compared and the pulse width is controlled so that the output voltage stays stable. Pin 11 and 14 are outputs connected in parallel, the signal forms the drive signal for the switching element T202 via T103 and T201 . The components L103, L104, R123, R124, R125, and C121 control the on and off switching of T202 and D201. D105 prevents inverse polarity across T202.

The IC102 senses the output current via the voltage over R126. If this voltage is too high - due to an overload - the pulse width and thus the output voltage is reduced.
The capacitors and coils in input and output suppresses switching noise enabling N418 to fulfill the CISPR noice regulations.

2.15.3 ADJUSTMENT PROCEDURE

ADJUSTMENT OF OUTPUT VOLTAGE.
Measure the output voltage across C126 with a load equal to the consumption of a VHF unit in receive condition (0.5 - 0.8A). Adjust R105 until the output is 13.2V if necessary.

ADJUSTMENT OF MAX. CURRENT.
Check that the output voltage is still 13.2V with a load of 5.8A (2.3 ohm) across the output.

Change the load to 1,5 ohm by connecting 4.3 ohm in parallel with the 2.3 ohm. The voltage will then be 10.5V and the output 7A. If necessary adjust the output to 10.5V with R111.

COMPONENT LOCATION DC POWER SUPPLY N418

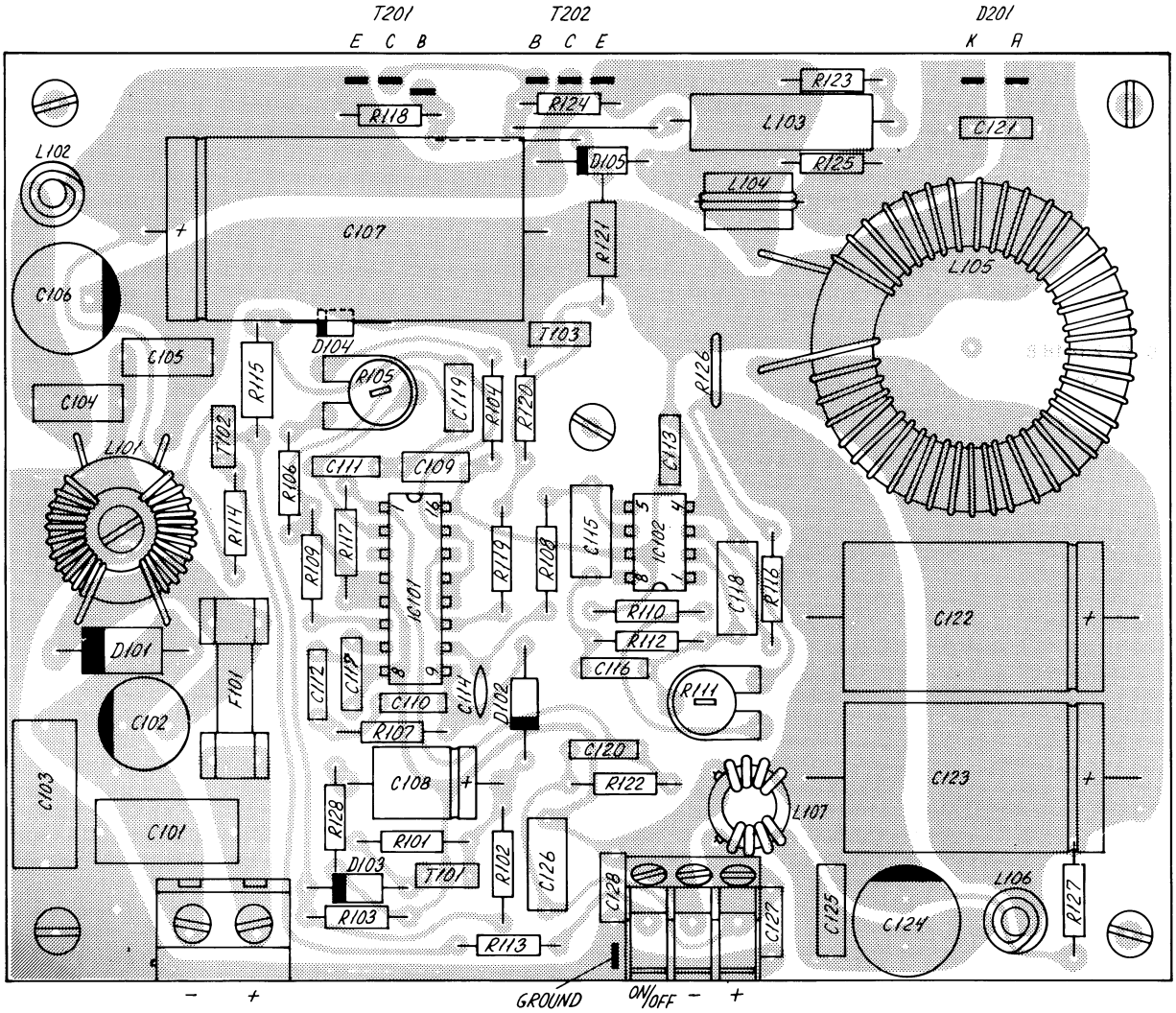

View from component side with lower side tracks.
23818C

DIAGRAM DC POWER SUPPLY N418

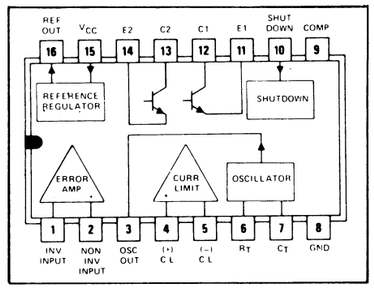

functional block diagram

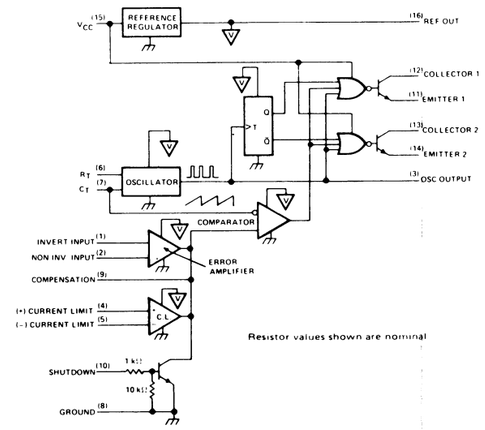

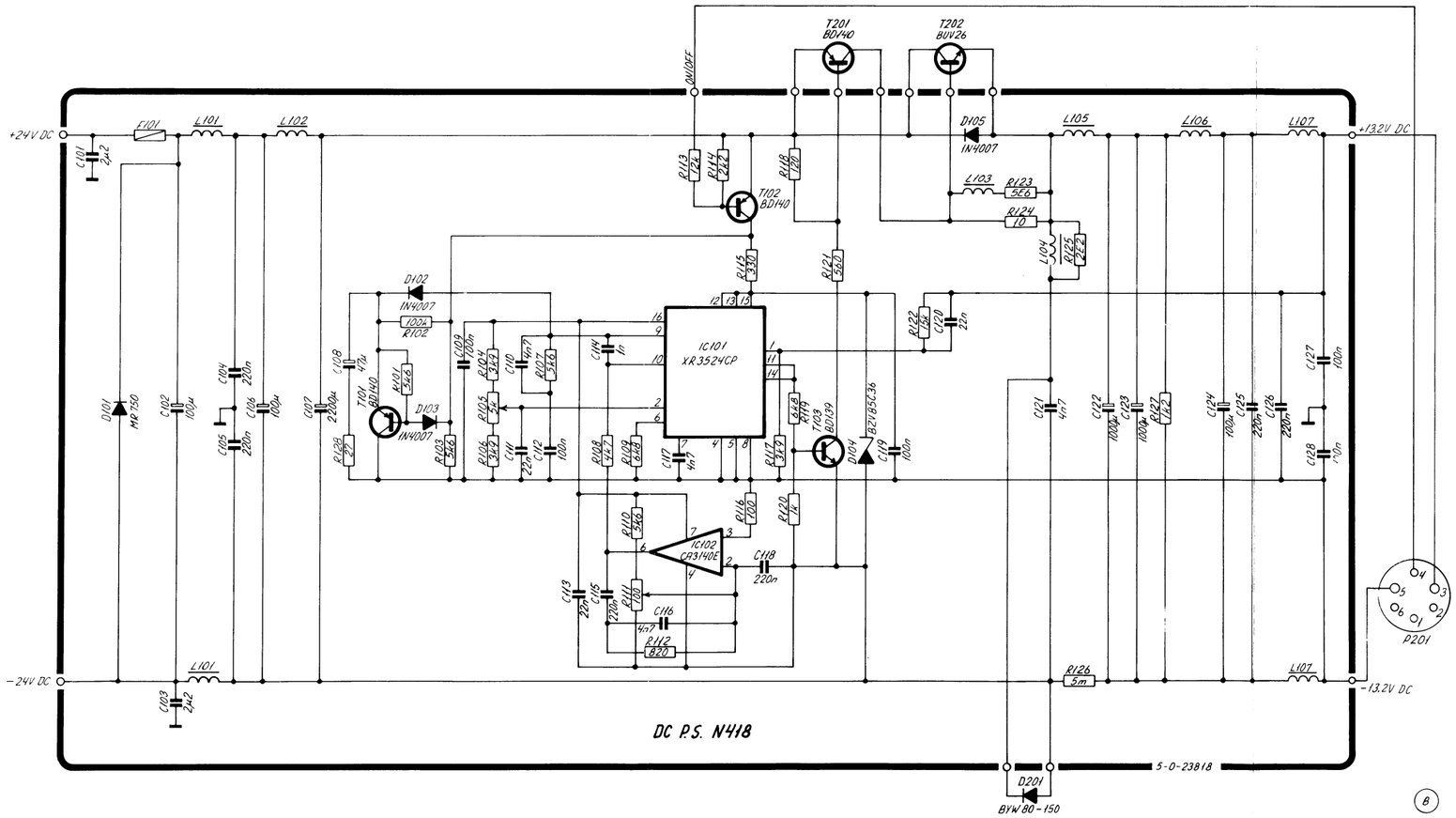

This diagram is valid for PCB rev. 23818C.

2.16 N420 24V/12V REGULATOR

GENERAL DESCRIPTION
The regulator N420 is a general purpose 24V DC to 13.2V DC regulator, e.g. to be used for supply of VHF radiotelephones.

The regulator N420 is a serial regulator with excellent noise performance.

2.16.1 TECHNICAL DATA

The regulator N420 is controlled from the connected VHF unit by the on/off button.

Input Voltage	21.6 to 31.2V DC
Output Voltage	13.4V DC
Output Current	Max. 8A DC
Operation Temperature Range	15°C to +55°C
Fuse	8 Amp. 5 x 20 mm
Current from on/off Terminal	Less than 15 mA DC

2.16.2 PRINCIPLE OF OPERATION

N420 is a linear serial regulator where most of the loss is dissipated in resistors. It is provided with a terminal for remote shut-down. If the on/off terminal is connected to the -terminal, the regulator is on. If the on/off terminal is disconnected, the regulator is off.

2.16.3 CIRCUIT DESCRIPTION

The output voltage is regulated by the integrated voltage regulator IC1. The output voltage is 12V DC plus the forward voltage over diodes D5 and D6: approx. 13.4V DC in total if T4 is conducting. If the output voltage drops the current through IC1 and R5 increases. An increase in voltage across R5 will result in an increase in current in T1 and the resistors R10 - R23 resulting in an increase in the output current. T1 delivers most of the output current and FC1 only a small driver current.

If the input voltage is low and the output current is high, the voltage across R10 -R23 results in T1 going into saturation. The voltage across R4 increases and when the voltage across R4 and V_{BE} Of T1 is greater than approx. 1 Volt, T3 starts to conduct base current to T1. This transistor then shunts the remaining current to the output, bypassing R10 - R23.
When the input voltage and the output current are high, T1 is nearly saturated. When the input voltage is low and the output current is high, the resistors R1 - R3 will result in saturation of both T1 and T2. The combination of T1 in saturation and T2 delivering the remaining output current divides the total loss, so the main loss is in the resistors giving low loss in the semi-conductors and a lower junction temperature, resulting in a higher reliability for the whole regulator.
T4 is used to switch the regulator ON and OFF. If the ON/OFF input is disconnected T4 is OFF and the base currents to T1 and T2 are zero and the current through IC1 will also be reduced to zero. The stand-by current consumption is then less than 10 micro amp. If the ON/OFF input is connected to - input, T4 goes into saturation and the regulator starts.

In case of a short-circuit over the output R5 and D3 limits the current through IC1 and T4 to approx. 250 mA and R1 - R3 and D3 limits the current through T1 and T2 to approx. 15 Amp. The temperature of the cooling surface will increase and activate the thermal protection circuit inside IC1 and lower the output voltage, even though a short-circuit of the output should be avoided.

The diode D1 protects against reverse input voltage. A fuse will blow in case of reverse input.

COMPONENT LOCATION 24V/12V REGULATOR N420

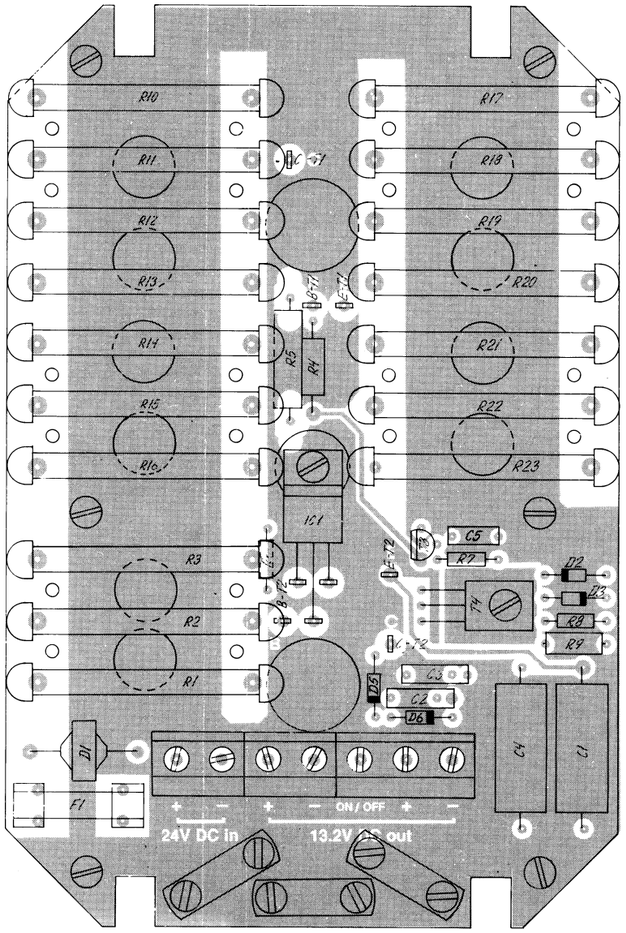

View from component side with upper side tracks.

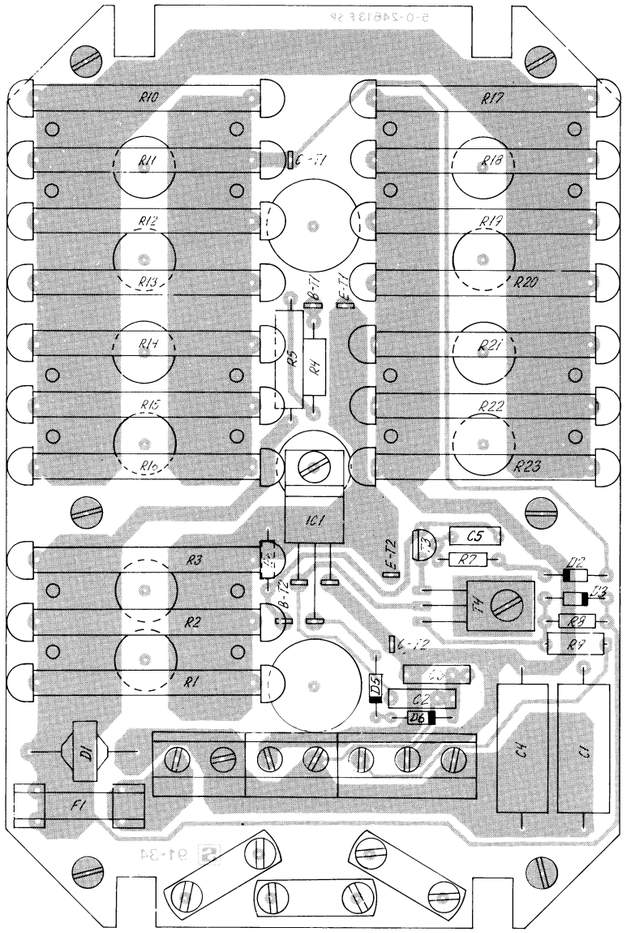

View from component side with lower side tracks.

24613F

DIAGRAM 24V/12V REGULATOR N420

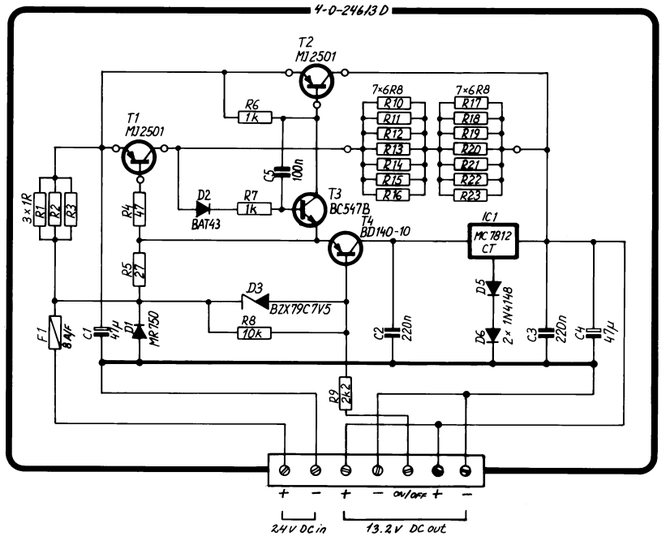

This diagram is valid for PCB rev. 24613F.

DIMENSION AND DRILLING PLAN N420

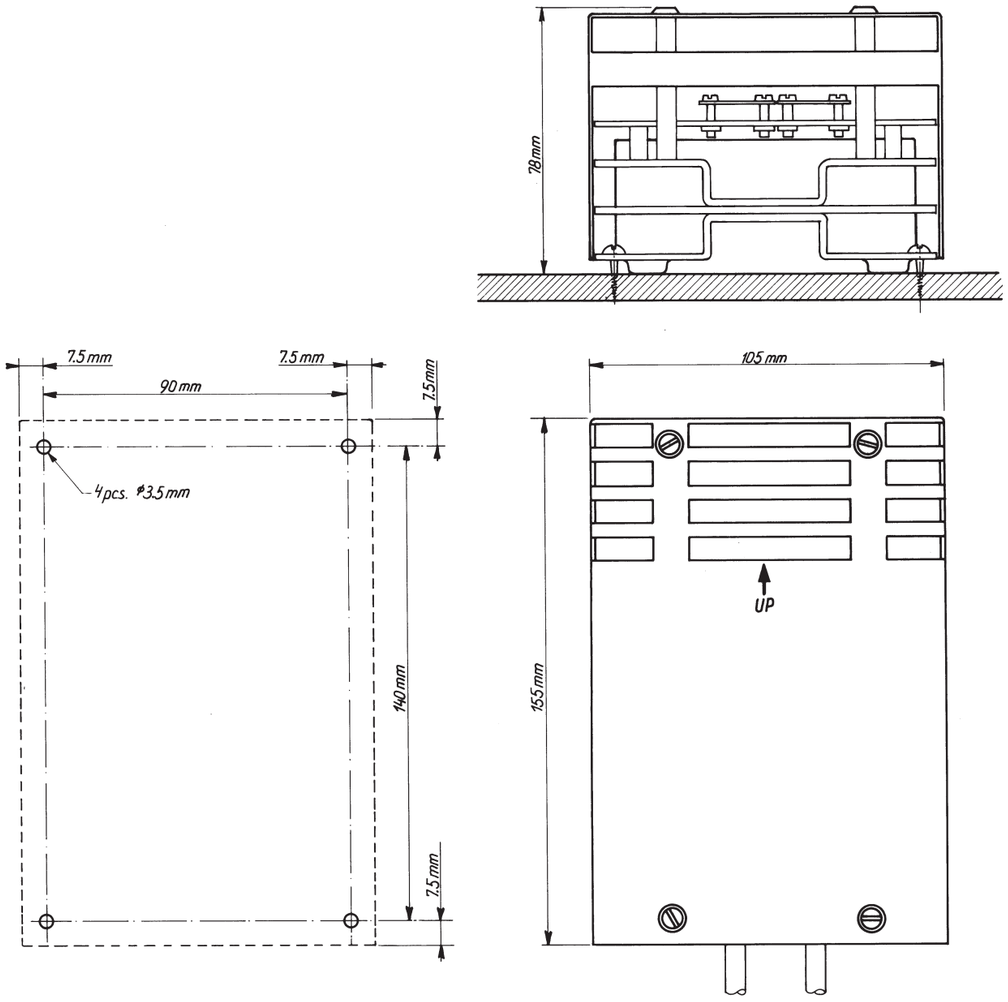

25332

N420 must only be mounted vertically.
Free distance must be kept to allow circulation.

PARTS LISTS N420

VOLTAGE REGULATOR	N420		ECI A/S	5-0-24613G	600416
POSITION	**DESCRIPTION**		**MANUFACTOR**	**TYPE**	**PART No.**
C1	CAPACITOR ELECTROLYTIC	47uF -10/+50% 63V	ERO	EB 00 FL 247 J	14.552
C2	CAPACITOR MKT	0.22uF 10% 63V	ERO*	MKT1818	11.090
C3	CAPACITOR MKT	0.22uF 10% 63V	ERO*	MKT1818	11.090
C4	CAPACITOR ELECTROLYTIC	47uF -10/+50% 63V	ERO	EB 00 FL 247 J	14.552
C5	CAPACITOR MKT	100nF 10% 100VDC	PHILIPS	2222 371 28104	11.180
D1	DIODE	MR750	MOTOROLA	MR750	25.219
D2	DIODE SCHOTTKY	BAT 43	THOMSON-CSF	BAT43	27.600
D3	DIODE ZENER	7.5V 5% 0.4W BZX79C7V5	PHILIPS	BZX79C7V5	26.539
D5	DIODE	1N4148 HIGH SPEED	PHILIPS	1N4148-143	25.131
D6	DIODE	1N4148 HIGH SPEED	PHILIPS	1N4148-143	25.131
F1	FUSE	8AF 250V Ø5x20mm	ELU	171 100 8AF (DIN 41571/1)	45.561
IC1	VOLTAGE REGULATOR	+12V	MOTOROLA*	MC7812CT	31.260
R1	RESISTOR POWER	1R0 OHM 10% 6.5W	VITROHM	1R0 10% TYPE 296-0	05.725
R2	RESISTOR POWER	1R0 OHM 10% 6.5W	VITROHM	1R0 10% TYPE 296-0	05.725
R3	RESISTOR POWER	1R0 OHM 10% 6.5W	VITROHM	1R0 10% TYPE 296-0	05.725
R4	RESISTOR	47 OHM 5% 0.6W	BEYSCHLAG	MBB 0207-00-BX-47R 5%	03.167
R5	RESISTOR PMF	27 OHM 5% 3W	PHILIPS	2322 195 13279	04.660
R6	RESISTOR MF	1k0 OHM 5% 0.4W	PHILIPS	2322 181 53102	01.200
R7	RESISTOR MF	1k0 OHM 5% 0.4W	PHILIPS	2322 181 53102	01.200
R8	RESISTOR MF	10k OHM 5% 0.4W	PHILIPS	2322 181 53103	01.225
R9	RESISTOR	2.2 KOHM 5% 0.6W	DRALORIC	SMA 0207 S TK100-2K2 5%	03.208
R10	RESISTOR POWER	6R8 OHM 10% 6.5W	VITROHM	6R8 10% TYPE 296-0	05.730
R11	RESISTOR POWER	6R8 OHM 10% 6.5W	VITROHM	6R8 10% TYPE 296-0	05.730
R12	RESISTOR POWER	6R8 OHM 10% 6.5W	VITROHM	6R8 10% TYPE 296-0	05.730
R13	RESISTOR POWER	6R8 OHM 10% 6.5W	VITROHM	6R8 10% TYPE 296-0	05.730
R14	RESISTOR POWER	6R8 OHM 10% 6.5W	VITROHM	6R8 10% TYPE 296-0	05.730
R15	RESISTOR POWER	6R8 OHM 10% 6.5W	VITROHM	6R8 10% TYPE 296-0	05.730
R16	RESISTOR POWER	6R8 OHM 10% 6.5W	VITROHM	6R8 10% TYPE 296-0	05.730
R17	RESISTOR POWER	6R8 OHM 10% 6.5W	VITROHM	6R8 10% TYPE 296-0	05.730
R18	RESISTOR POWER	6R8 OHM 10% 6.5W	VITROHM	6R8 10% TYPE 296-0	05.730
R19	RESISTOR POWER	6R8 OHM 10% 6.5W	VITROHM	6R8 10% TYPE 296-0	05.730
R20	RESISTOR POWER	6R8 OHM 10% 6.5W	VITROHM	6R8 10% TYPE 296-0	05.730
R21	RESISTOR POWER	6R8 OHM 10% 6.5W	VITROHM	6R8 10% TYPE 296-0	05.730
R22	RESISTOR POWER	6R8 OHM 10% 6.5W	VITROHM	6R8 10% TYPE 296-0	05.730
R23	RESISTOR POWER	6R8 OHM 10% 6.5W	VITROHM	6R8 10% TYPE 296-0	05.730
T1	TRANSISTOR DARLINGTON	MJ2501	TEXAS*	MJ2501	29.235
T2	TRANSISTOR DARLINGTON	MJ2501	TEXAS*	MJ2501	29.235
T3	TRANSISTOR AF	BC547B NPN TO-92	PHILIPS	BC547B	28.067
T4	TRANSISTOR	BD140-10	AEG*	BD140-10	29.066

CONTENTS

3 MECHANICAL DISASSEMBLING AND MODULE LOCATION

3.1 MECHANICAL DISASSEMBLING

Fig. 1.1

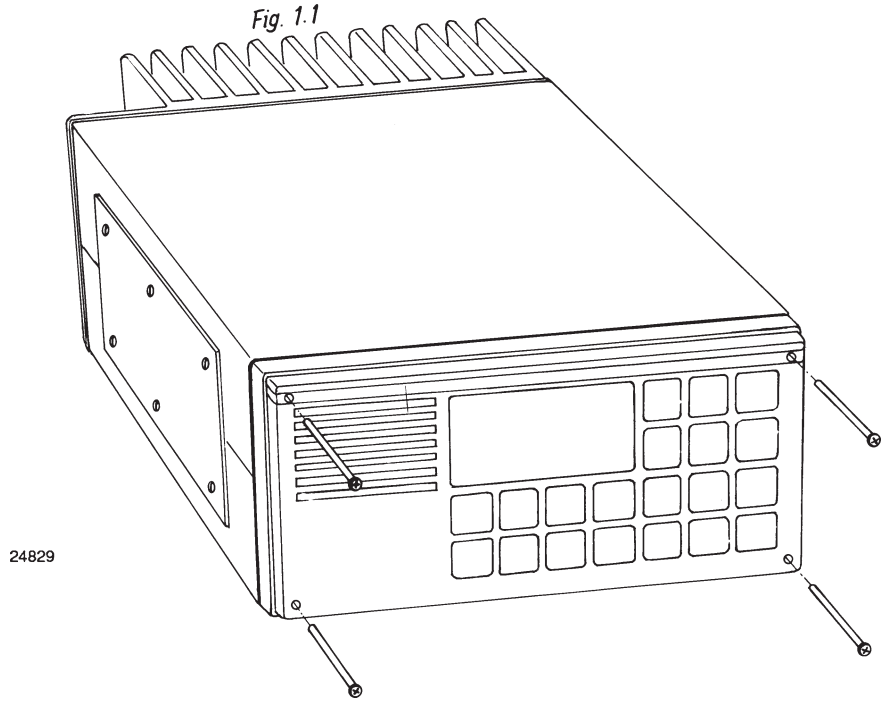

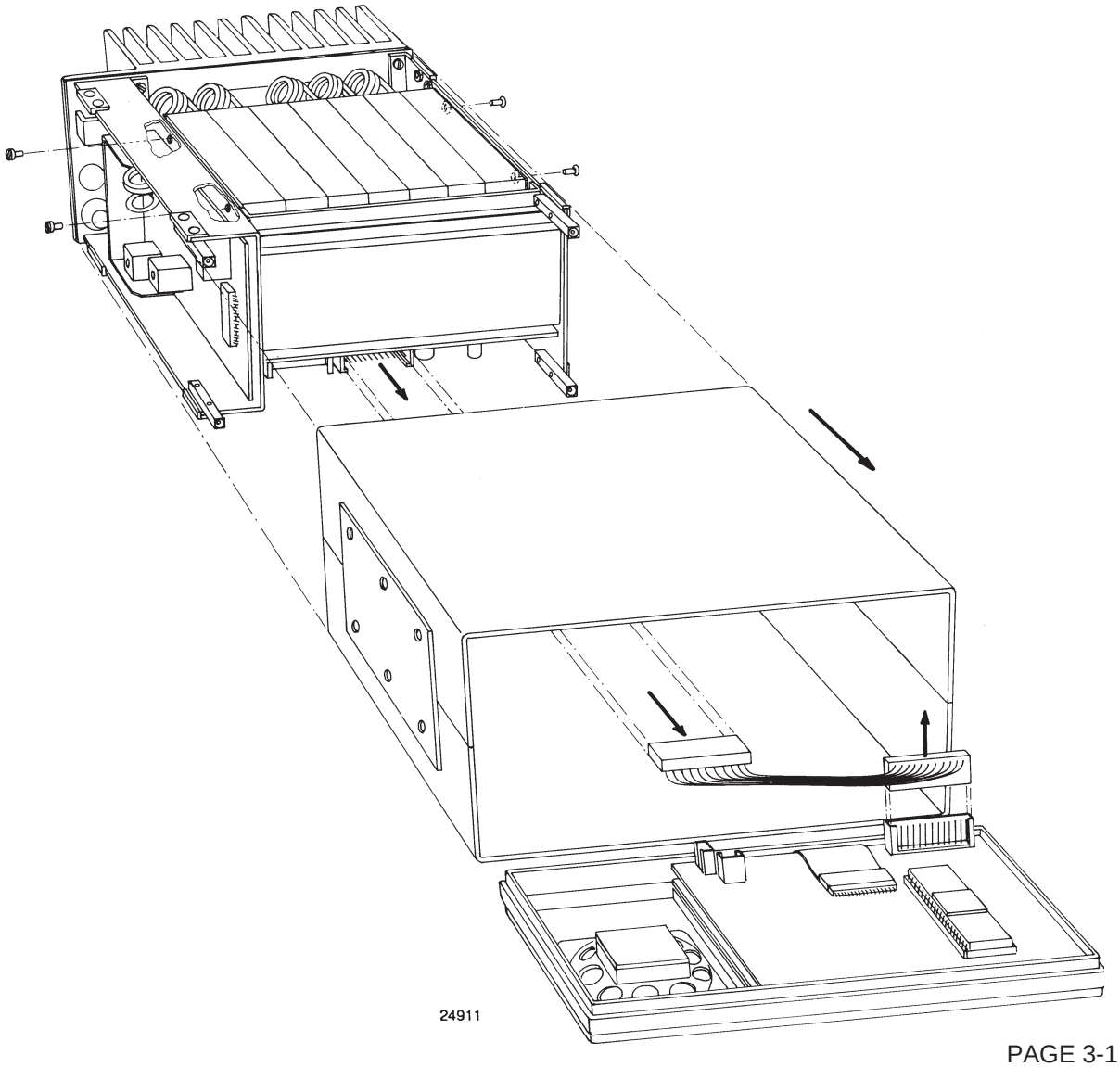

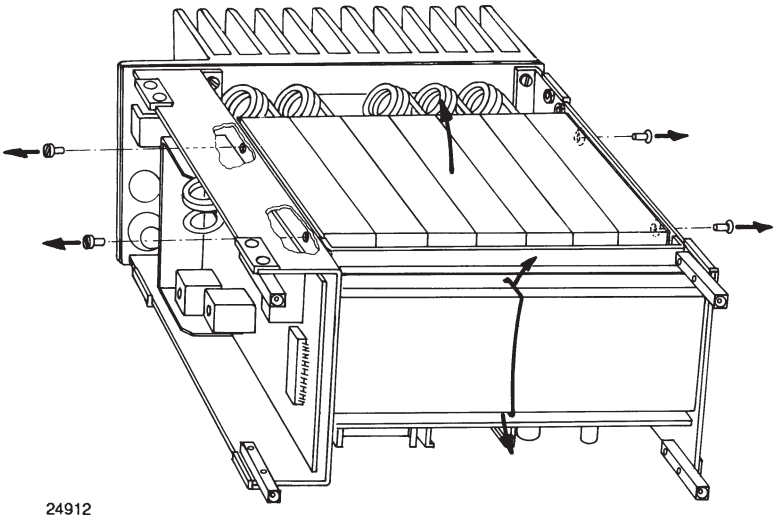
24912

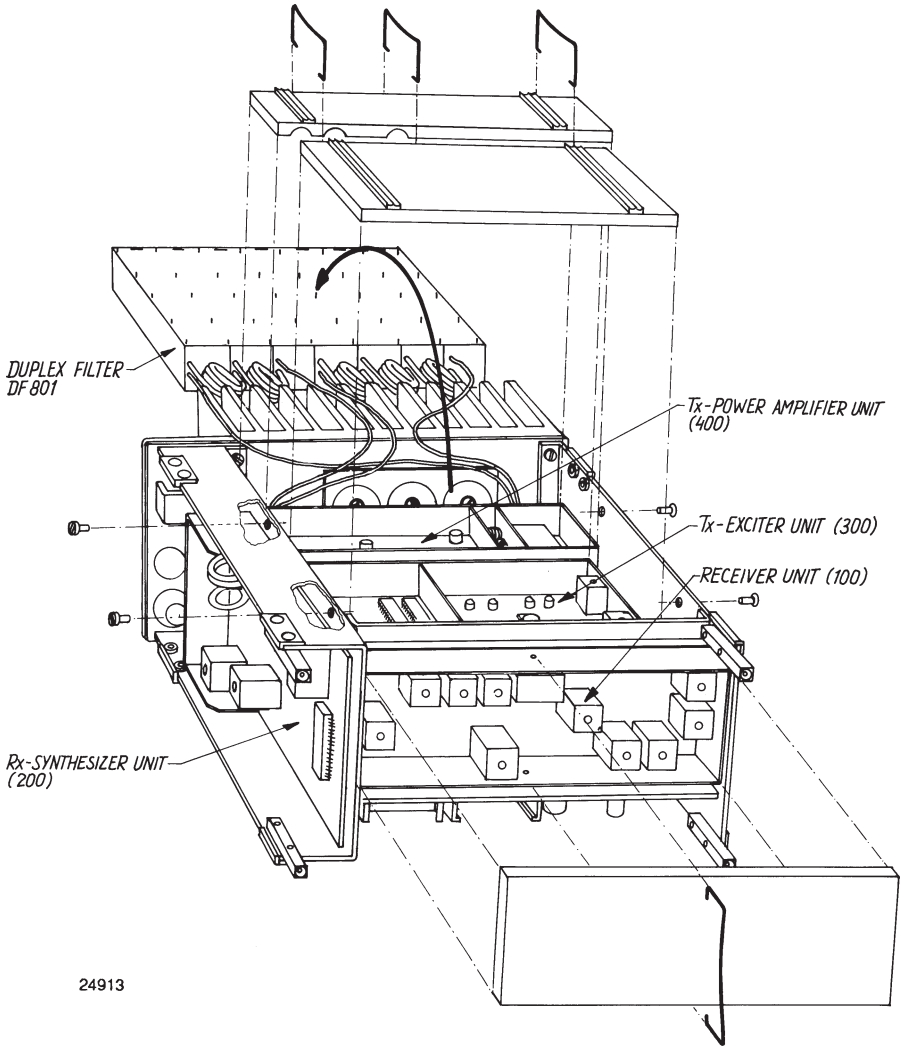
DUPLEX FILTER
DF 801
Tx-POWER AMPLIFIER UNIT
(400)
Tx-EXCITER UNIT (300)
RECEIVER UNIT (100)
Rx-SYNTHESIZER UNIT
(200)
24913

3.2 MODULE LOCATION

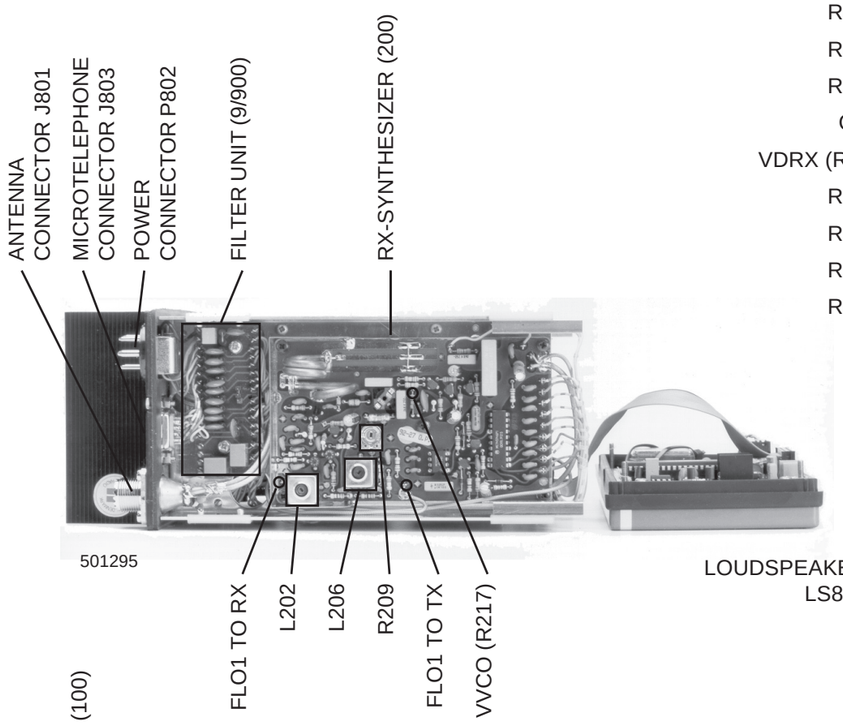

501295

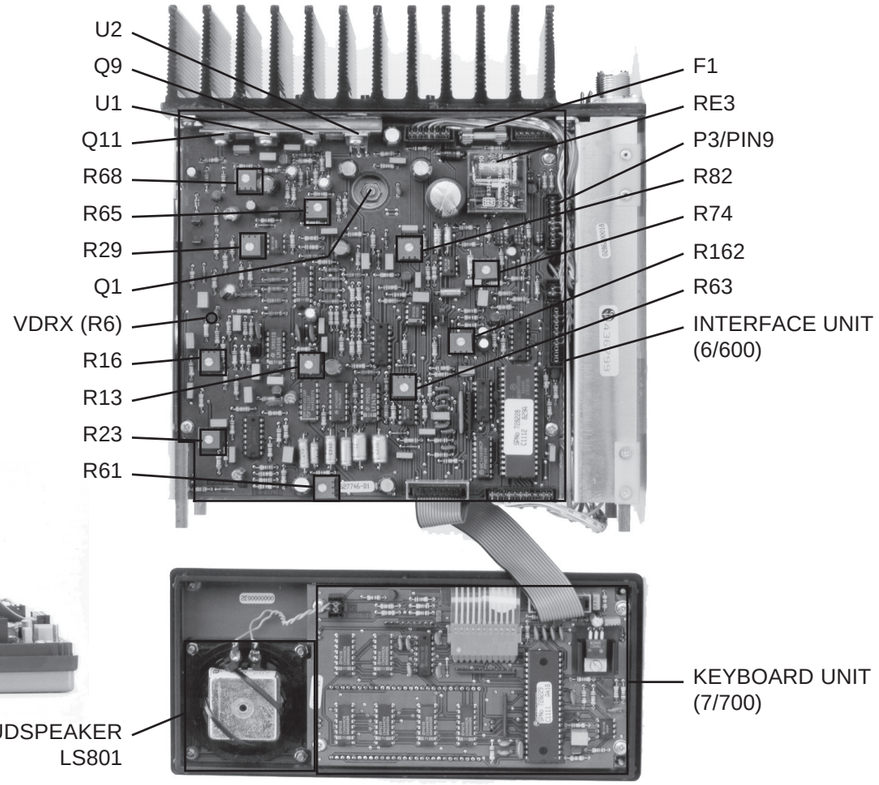

501293

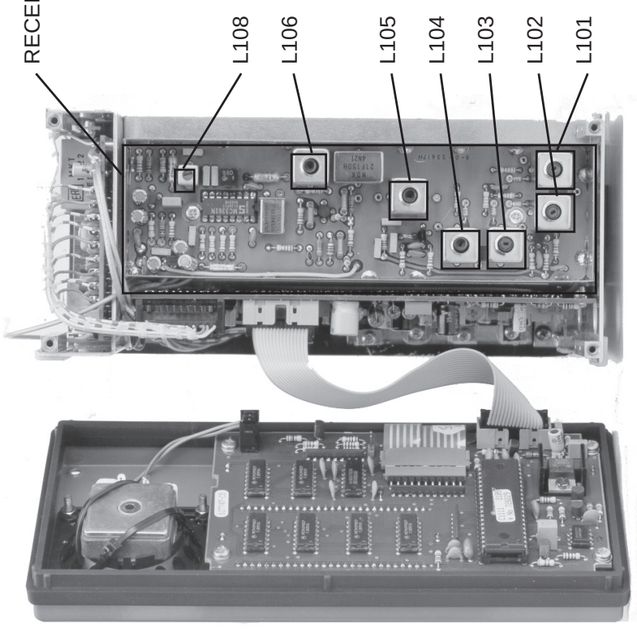

501530

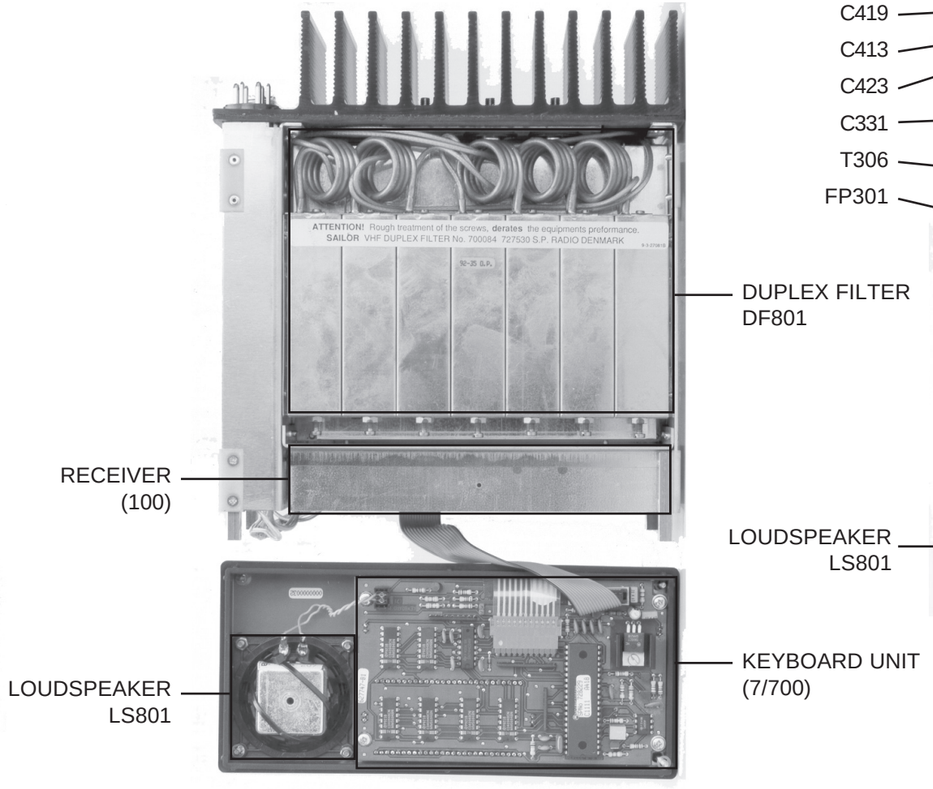

501292

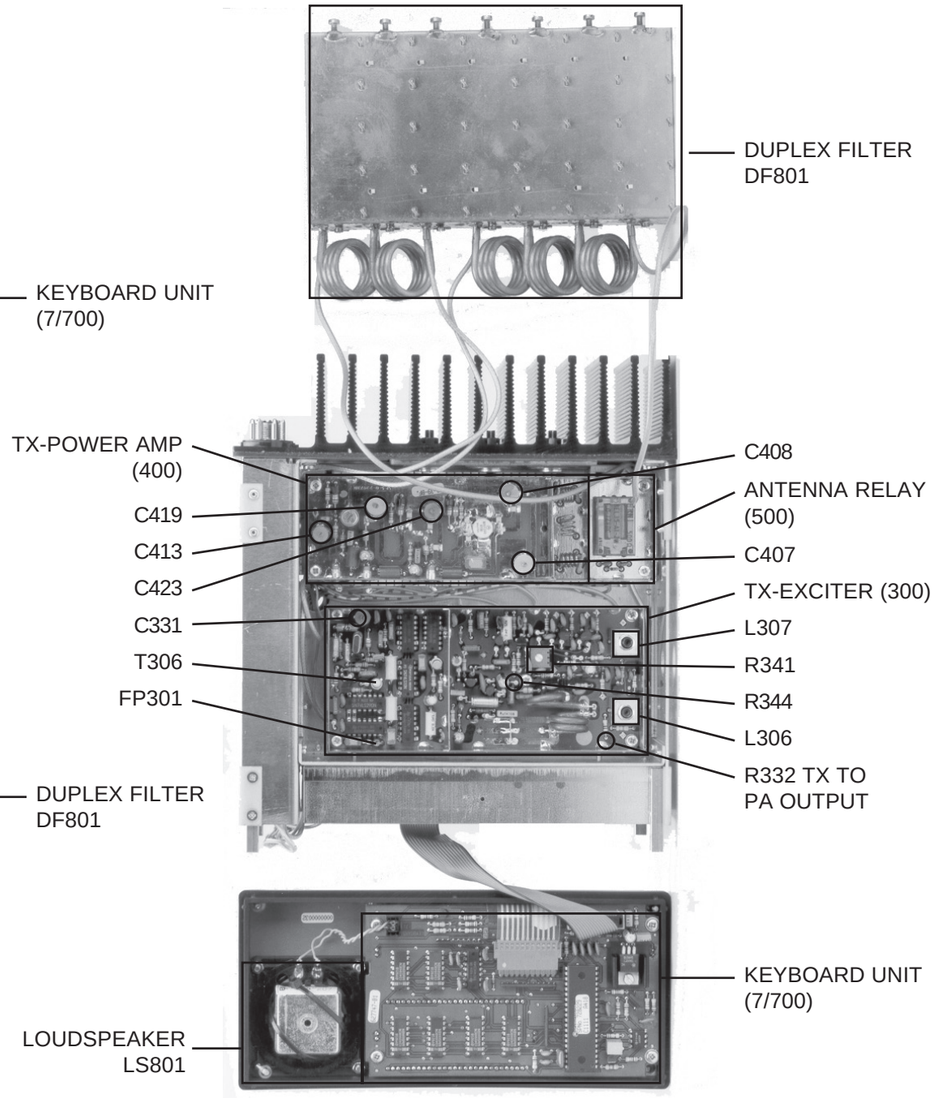

501294

CONTENTS

4 SERVICE

4.1 MAINTENANCE

PREVENTIVE MAINTENANCE
If RT2047 has been installed properly the maintenance can be reduced to an overhaul at each visit of our service staff. Inspect the set, the antenna, cables and plugs for mechanical damages, salt deposits, corrosion and any foreign materials. Due to its solid structure the RT2047 has a long lifetime, but due to the operating conditions it should be carefully controlled at maximum 12 month intervals. The set should be taken to a certified service point for testing. Along with each set a “Test-sheet” is delivered in which all the measurements made in the test department of the factory are listed. If the control measurements made in the service workshop should show other values then those listed in the “Test-sheet”, the set must be adjusted as specified under Adjustment Procedure.

4.2 ADJUSTMENT INSTRUCTIONS

INTRODUCTIONS
The measuring values indicated in paragraph 2 concerning circuit description and schematic diagrams are typical values and it will be necessary to use instruments in absolute conformity with the list below:

4.3 PROPOSAL FOR NECESSARY MEASURING INSTRUMENTS

VHF Signal Generator type TF2015	MARCONI
FM Modulation Meter type TF2303	MARCONI
Distortion Analyzer type TF2337A	MARCONI
AF Volmeter type VT-121	TRIO
Tone Generator type PM5107	PHILIPS
Electronic Multi meter type PM2505	PHILIPS
RF Directional Watt meter Model 43	BIRD
50W Load with 30 dB Attenuator type 8321	BIRD

FREQUENCY COUNTER:

Frequency range	$\geq$ 175 MHz
Sensitivity	$\leq$ 100 mV
Impedance	$\geq$ 1 MΩ & 50Ω
Accuracy	$\leq 1\times10^{-6}$

We also recommend the portable universal VHF test set from Radio Holland,
the **Omnitester type RH-4316**. This test set is designed especially for fast and accurate service of VHF transceivers.

TEST PROBE

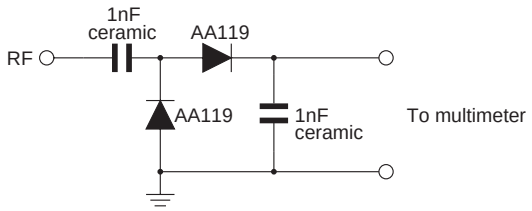

LAYOUT OF THE PROBE

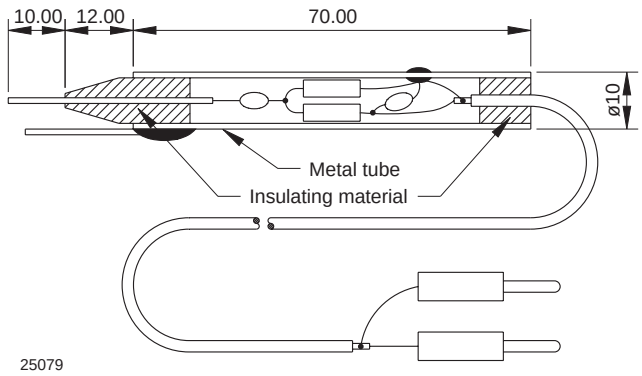

4.4 CALIBRATION OF THE TEST PROBE

For some test probe measurements it is necessary to use a test probe calibrated with a specified multi meter.

NECESSARY EQUIPMENT FOR THIS PROCEDURE:

1. Diagram for the measurements
2. Test probe
3. Multi meter
4. New factory adjusted RT2047

4.5 PROCEDURE FOR CALIBRATION

1. Switch on the set.
2. Select channel 28.
3. Remove coax cable from the soldering point for F_{L01} to RX on the RX-Synthesizer and replace it with a 50 resistor.
4. Connect the test probe to the point mentioned above and record the result in the diagram.
5. Remove the resistor and solder back the coax cable.
6. Follow the procedure mentioned above by measuring the levels from F_{L01} to TX on the RX-Synthesizer and the TX drive level from the TX-Exciter.

All other test probe measurements are relative and ought to be measured with the same test probe and recorded in the diagram.

4.6 ADJUSTMENT PROCEDURE

4.6.1 ADJUSTMENTS OF INTERFACE UNIT MODULE 6/600

ADJUSTMENT AND CONTROL OF VOLTAGE REGULATORS.

1. Switch on the set.
2. Select channel 28.
3. Check 13.2V with a multi-meter on fuse F1-6 and P3-6 pin 9.
4. Check 5V +0.2V with a multi-meter on U1-6 pin 3.
5. Connect the multi-meter to Q9-6's collector and adjust the 10V regulator with R65-6 to 10V +0.2V.
6. Connect the multi-meter to Q11-6's collector and key the transmitter.
7. Adjust the PA-regulator with R68-6 to 8.4V ± 0.2V.
8. Connect the multi-meter to R6-6.
9. Adjust RX-control voltage (VD_{RX}) to 8V ± 0.2V with R16-6.

ADJUSTMENT OF SELCALL TEST TONE

The procedure is described in the manual, INSTRUCTIONS FOR IDENTITY AND SERVICE PROGRAMMING OF VHF RT2047, section 3.8: SELCALL TEST TONE

4.6.2 ADJUSTMENTS OF RX-SYNTHESIZER MODULE 200

1. Select channel 28.
2. Check the DC-control voltage on R217 with a multi meter to be 8V ± 0.4V. If components have been changed in the VCO-circuit, it is possible that the jump wire used for adjusting the VCO frequency range has to be moved until the 8 ± 0.4 V is achieved.
3. Control the frequency F_{L01} to RX with a frequency counter to be 140.600 MHz.

ADJUSTMENT OF F_{L01} TO TX AND F_{L01} TO RX.

1. Connect "calibrated" test probe to soldering point for F_{L01} to TX.
2. Adjust L202 until the core is 0.5 mm over the coil form and potentiometer R209 CCW to 1/3 of the range.
3. Adjust L206 to Max. deflection on the Tp meter.
4. Select channel 6.
5. Check the deflection on the Tp meter to be nearly the same as ch. 28. Otherwise obtain the level on ch. 6 and ch. 28 to be nearly the same by adjusting L206.
6. Connect test probe to soldering point for F_{L01} to RX.
7. Adjust L202 to Max. deflection on the Tp meter and secure that deflection on ch. 6 and ch. 28 are nearly the same.

The levels measured with power meter (mW) and 50 Ω impedance must be:

F_{L01} to TX: 0.25 mW
F_{L01} to RX: 5 mW ±1.5 dB.

4.6.3 ADJUSTMENTS OF TX-EXCITER MODULE 300

1. Select channel 28.
2. Connect frequency counter to the top of T306.
3. Adjust trimming capacitor C331 until the frequency counter shows 21MHz ± 20Hz. Note that when the transmitter is keyed you can measure on R332 and adjust R331 until the frequency counter show 157400000 Hz ± 150 hz.
4. Check the clock frequency on microprocessor to be 2.1 MHz on FP301 .
5. Check the DC-control voltage on R344 to be 8 ± 0.4V. If components have been changed in the VCO-circuit it is possible that the jump wire used for adjusting the VCO frequency range has to be moved until the 8 ± 0.4V is achieved. (With the Transmitter Keyed)

ADJUSTMENT OF TX-DRIVE LEVEL.

1. Remove coax cable from TX-PA and solder a 50 Ω resistor from TX to PA output to ground.
2. Connect test probe to TX to PA output.
3. Adjust coils L306 and L307 to Max deflection on the Tp meter and ensure that the levels on ch. 6 and ch. 28 are nearly the same.
4. Adjust R341 to the correct output: about 3.8V on the Tp meter.
5. Remove the 50 Ω resistor and solder the coax cable back to the output point.

4.6.4 ADJUSTMENTS OF TX-POWER AMPLIFIER MODULE 400

ADJUSTMENT OF OUTPUT POWER.

1. Select channel 20.
2. Connect RF-power meter and a 50 Ω/ 25 Watt load resistor to the antenna connector J801.
3. Adjust trimming capacitors C423, C419, C413, C408, C407 to Max. deflection on the power meter.
4. Repeat the adjustment under part 3 several times to get Max. output power.
5. Adjust R68-6 on interface unit until the power meter shows 25 Watt. Max PA regulator Vcc = 10.5V.
6. Set output power to 1W.
7. Adjust R29-6 on the interface unit until the power meter shows 0.8 Watt.

4.6.5 ADJUSTMENT OF MODULATION ON INTERFACE UNIT MODULE 6/600

1. Select channel 28.
2. Disconnect the blue wire on the Filter Unit coming from J3-8 pin 3.
3. Connect tone generator and AF Volmeter between the solder terminal for the disconnected blue wire and ground (the white wire next to it).
4. Set power output level to 1W.
5. Connect modulation meter loosely to the RF-load resistor.
6. Connect distortion analyzer to the modulation meter.
7. Turn potentiometer R61 to the middle of its adjustment range.
8. Set the tone generator to a frequency of 1000 Hz and the output level to 1 V_{RMS} (nominal level 100 mV_{RMS} ± 20 dB). Read the level on the AF-volmeter.
9. Key the transmitter.
10. Adjust R23-6 to Max. deviation: Δ F = ± 5.0 kHz.
11. Set level of tone generator to nominal level: 100 mV_{RMS}.
12. Adjust R61-6 to nominal modulation: Δ F = ± 3.0 kHz.
13. Check that the distortion is less than 5%.

4.6.6 ADJUSTMENT OF RECEIVER UNIT MODULE 100

ADJUSTMENT OF RF AND IF AMPLIFIER

1. Select channel 28.
2. Connect the signal generator to the antenna connector J801.
3. Connect the test probe to pin 16 on U101.
4. Set the signal generator frequency to 162.000 MHz and increase the level until the deflection on the T_p meter reaches 30% of maximum deflection.
5. Readjust the signal generator level during the adjustment, if necessary to keep the same deflection on the T_p meter. You must be sure that the signal is not compressed.
6. Adjust coils L101, L102, L103, L104, L105, L106 to maximum deflection on the T_p meter.
7. Select channel 6.
8. Set signal generator to 156.300 MHz.
9. Adjust potentiometer R16-6 (interface unit) to maximum deflection on the T_p meter.
10. Select channel 28.
11. Set the signal generator frequency to 162.000 MHz.
12. Adjust coils L101, L102, L103, L104 to maximum deflection on the T_p meter.

ADJUSTMENT OF DETECTOR, TELEPHONE-AMPLIFIER, LF-POWER-AMPLIFIER AND THE AF FROM RX BUFFER

1. Select channel 6.
2. Connect the signal generator to the antenna connector J801.
3. Connect frequency counter between pin 3 of U101 and frame through a 10 uF capacitor.
4. Set signal generator level to -30 dBm (no modulation)
5. Adjust signal generator frequency until frequency counter shows 455.0 kHz ± 100 Hz.
6. Set modulation on signal generator to nominal modulation, f_m = 1kHz and frequency deviation Δ f = ± 3 kHz.
7. Connect the AF voltmeter to the telephone output, pin 1 on J803 or the solder terminal on the Filter-Unit for the red/orange wire. (The telephone output must be loaded with 200 Ω or a telephone).
8. Adjust coil L108 to maximum deflection on the AF voltmeter.
9. Adjust potentiometer R74-6 to an AF level of 0.45 V_{RMS}.
10. Connect a distortion analyzer between the orange and green wire (ground) on the Filter-Unit.
11. Set volume control to maximum level (Pos. 15).
12. Adjust potentiometer R113-6 to 3.3 V_{RMS} over 4 Ω.
13. Check that distortion is below 5%.
14. Connect AF voltmeter to the ‘AF from Rx´-signal located in the Handset Key connector (J803), pin 6 or solder pin P25-9 on the Filter Unit. Also connect a 1 KΩ load.
15. Adjust potentiometer R162-6 until the AF voltmeter reads 0.25 V_{RMS}.

ADJUSTMENT AND CONTROL OF RECEIVER SENSITIVITY:

l. Select channel 6.
2. Connect the signal generator to antenna connector J801.
3. Connect distortion analyzer between the orange and green wire (ground) on Filter-Unit.
4. Set the signal generator to best sensitivity (12 dB SINAD).
5. Adjust potentiometer R16-6 (Interface Unit) to the best sensitivity.
6. Adjust coils L101, L102, and L103 to Max. signal to noise ratio (best sensitivity).
7. Check that the sensitivity is better than 0.8 uV EMF for 12 dB SINAD.

ADJUSTMENT OF SQUELCH:

1. Select channel 28.
2. Connect signal generator to antenna connector J801.
3. Set squelch control to Pos. 0.
4. Adjust signal generator to give -18 dB signal to noise ratio.
5. Set squelch control to Max. position (Pos. 8).
6. Adjust potentiometer R82-6 until the squelch just starts to cut the noise.

4.7 TROUBLE-SHOOTING

Trouble-shooting should only be attempted by persons with a sufficient technical background, who have the necessary measuring instruments at their disposal, and who have carefully studied the operation principles and structure of RT2047.

Commence by ascertaining whether the fault is somewhere in the antenna circuit, the power source, the handset or in the transmitter - receiver unit.

For help with trouble-shooting in the RT2047, the section 2 CIRCUIT DESCRIPTION, contains diagrams, principal descriptions and drawings showing the location of the individual components. In the diagrams typical values are indicated for the DC and AC voltages, just as the test points are indicated in the diagrams.

RT2047 has a number of trimming cores and trimmers, which must not be touched, unless adjustments like specified under section 4.5 ADJUSTMENT PROCEDURE can be made.

When measuring in the units, short-circuits must be avoided as the transistors could be destroyed.
A great help for trouble-shooting is the TEST PROGRAMMES FOR RT2047 mentioned in section 3. of the manual: INSTRUCTIONS FOR IDENTITY AND SERVICE PROGRAMMING OF VHF RT2047.

Therefore we recommend all service personal to read sections 3,4 and 5 where the fault finding facilities in the test programmes are located.

4.8 REPLACEMENT OF COMPONENTS

Changing of transistors, diodes, resistors, capacitors and similar components will involve the use of a small “pencil” soldering iron of 30 to 75 Watt rating. The soldering must be performed rapidly to avoid over heating, and the use of a tin sucker is recommended, as there is a risk that both the components and the printed circuit will be damaged otherwise.

4.9 REPLACEMENT OF MODULES

If a fault has been located to certain module time can be saved by replacing it and repairing it on a later occasion.

4.10 NECESSARY ADJUSTMENTS AFTER REPLACEMENT OF A MODULE

4.10.1 REPLACEMENT OF RECEIVER UNIT MODULE 100

1. Adjustment of RF and IF amplifier, point 1 - 12.
2. Alignment of detector, telephone-amplifier, LF-power-amplifier and the AF from Rx buffer, point 1 - 15.
3. Adjustment and control of receiver sensitivity, point 1 - 7.
4. Adjustment of Squelch, point 1 - 6.

4.10.2 REPLACEMENT OF RX-SYNTHESIZER MODULE 200

Normally the module is adjusted from the factory. Just control the frequency on the soldering point for FL01 to Rx on a simplex channels e.g. oh. 6 to be in Rx-mode: 156.300 MHz - 21.4 MHz = 134.900 MHz and in Tx-mode: 156.300 MHz - 16.8 MHz = 139.500 Mhz.

4.10.3 REPLACEMENT OF TX-EXCITER MODULE 300

Follow the procedure in section 4.5.3. Adjustment of Tx-exciter:

1. Control of frequencies and DC-control voltage to VCO, point 1 - 5.
2. Adjustment of Tx-drive level, point 1 - 5.

4.10.4 REPLACEMENT OF TX-POWER AMPLIFIER MODULE 400

Follow the procedure in section 4.5.4. Adjustment of Tx-Power Amplifier about adjustment of output power, point 1 - 7.

4.10.5 REPLACEMENT OF INTERFACE UNIT MODULE 6/600

1. Follow the procedure in section 4.5.1. Adjustment of Interface Unit about adjustment and control of voltage regulators, point 1 - 9 and adjustment of the SELCALL TEST TONE.
2. Section 4.5.5. Adjustment of Modulation on Interface Unit, point 1-13.
3. Section 4.5.6. Adjustment of Receiver Unit about adjustment of Telephone-amplifier, LF-power-amplifier and the AF from Rx buffer amplifier, point 1 - 15, leaving out point 3, 5 and 8 and about adjustment of squelch, point 1 - 6.
4. Section 4.5.4. Adjustment of TX-Power Amplifier, point 5 - 7.

4.11 PIN CONFIGURATION

TOP VIEW

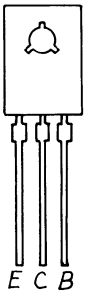

BD 138
BD 234

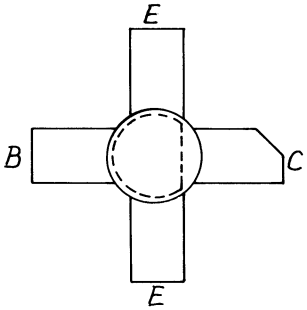

MRF 240

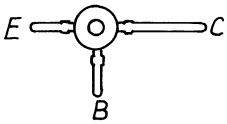

BF 979S

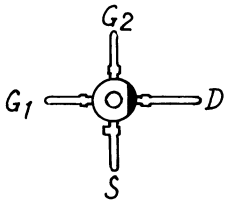

BF 961

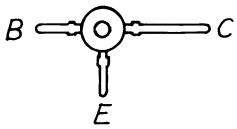

BFW 92A

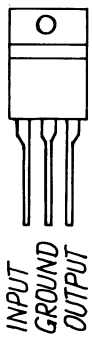

MC 7805 C

BOTTOM VIEW

TIS 88A

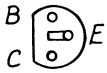

BF 199
BF 494

BC 237 B
BC 328 - 25
BC 338 - 25
BC 547 A
BC 548 B
BC 549 C
BC 558
BF 506

BC 638
BC 639

2N 2368

BF 509

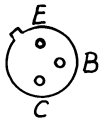

2N 4427

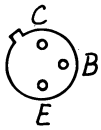

MRF 237

J310

4.12 PIN CONFIGURATIONS, BLOCK & SCHEMATIC DIAGRAMS FOR IC'S

MC6805U3 8-BIT MICROCOMPUTER

PIN ARRANGEMENT BLOCK DIAGRAM

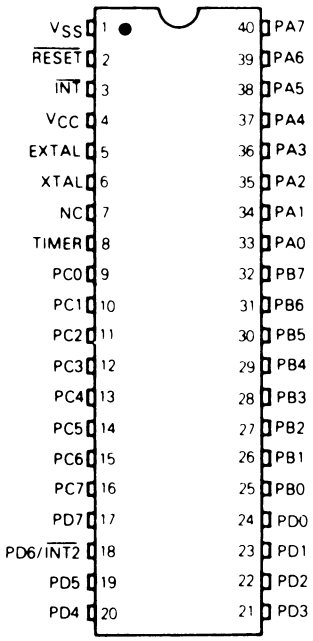

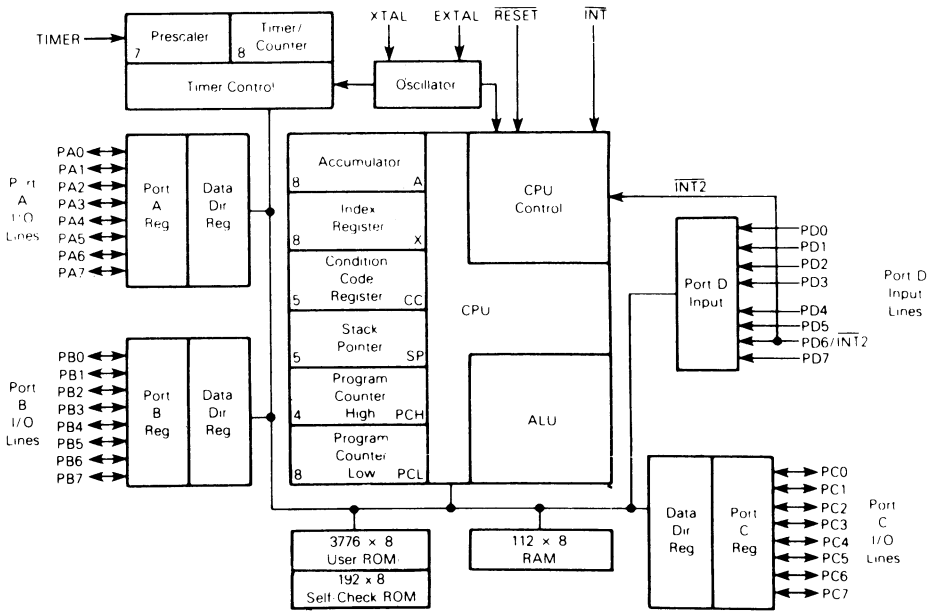

MC68HC705C8 8-BIT MICROCOMPUTER

PIN ARRANGEMENT BLOCK DIAGRAM

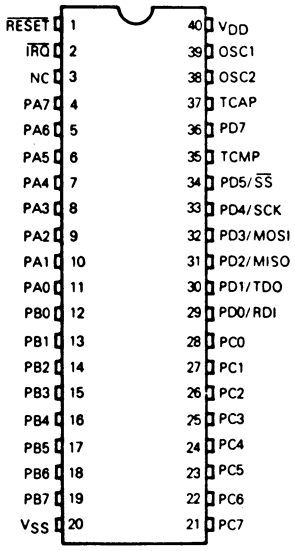

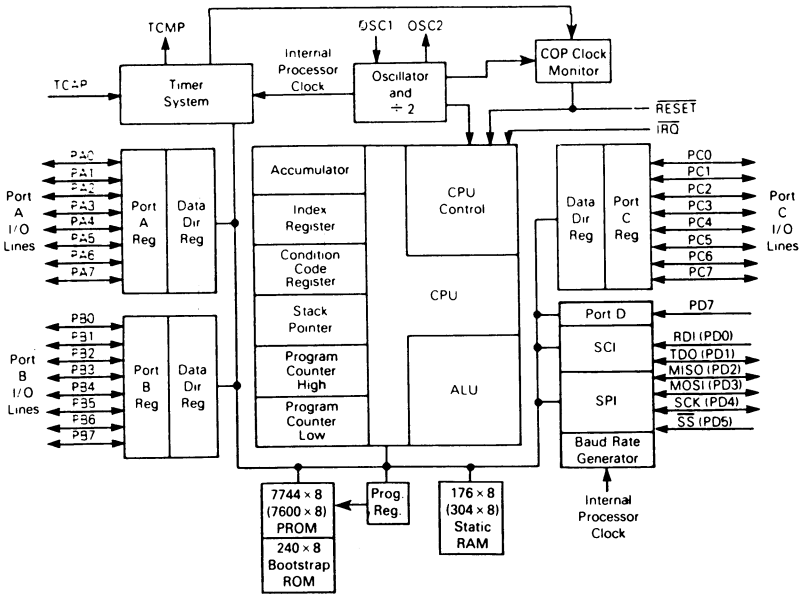

PIN NAMES

VPC. . . . . Program Voltage Control
ADQ . Address Input + Data Input/Output
T1, T2 . . . . . Margin Testing
C1, C2, C3, C4 . . . . . Chip Address 1 to 4
CL . . . . . Clock
$\overline{RE}$ . . . . . $\overline{Reset}$
AD/$\overline{DA}$. . . . . Shift Register Select

NMC93C56N

PIN ARRANGEMENT

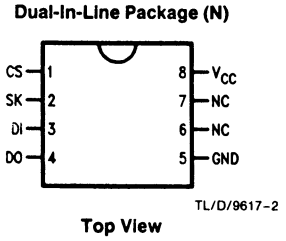

BLOCK DIAGRAM

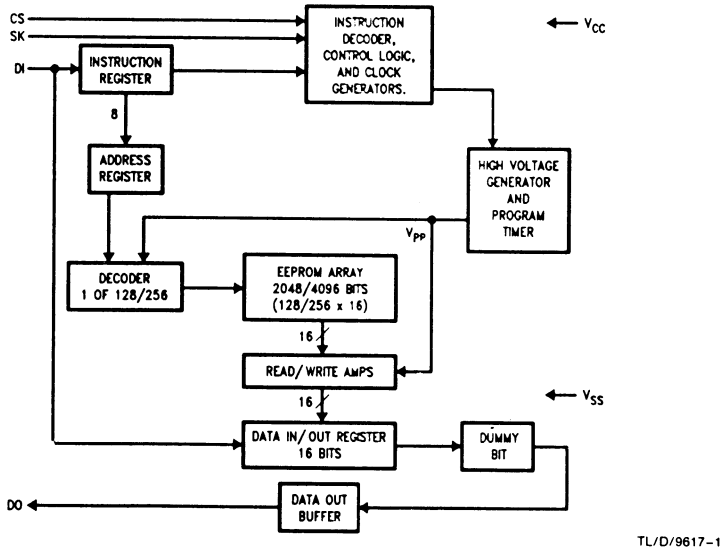

LM393N

PIN ARRANGEMENT

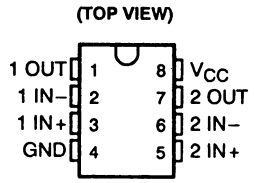

MC145146 4-BIT DATA BUS INPUT PLL FREQUENCY SYNTHESIZER

PIN ARRANGEMENT BLOCK DIAGRAM

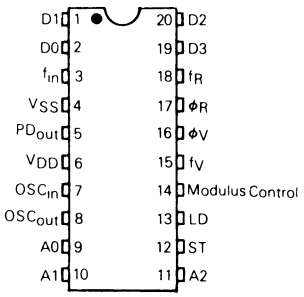

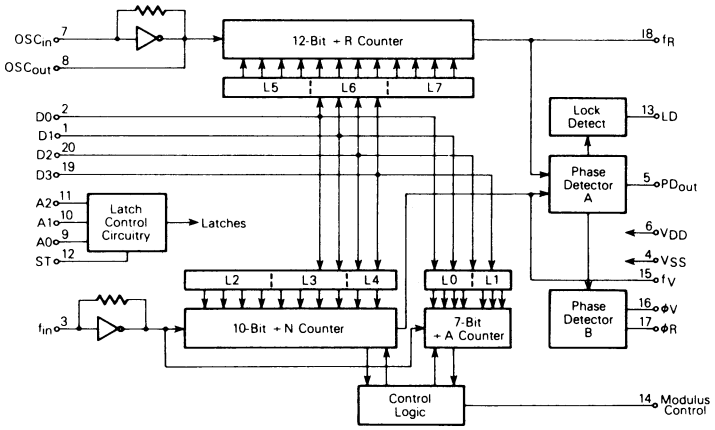

MC3361 FM IF AMPLIFIER, LIMITER AND DETECTOR

PIN ARRANGEMENT BLOCK DIAGRAM

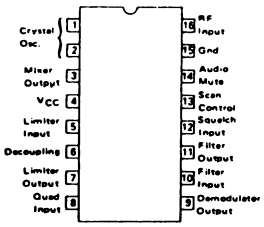

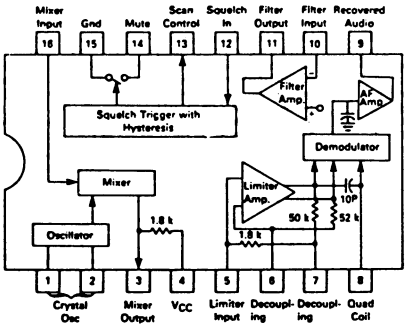

MC1458CP DUAL OPERATIONAL AMPLIFIER

CONNECTION DIAGRAM EQUIVALENT CIRCUIT SCHEMATIC

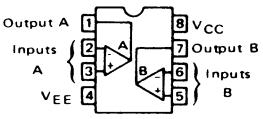

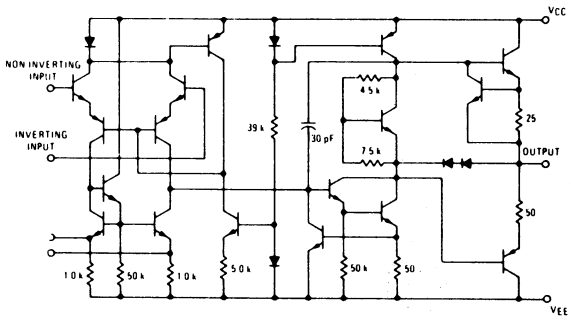

MC1413 HIGH-VOLTAGE, HIGH-CURRENT TRANSISTOR ARRAYS

PIN CONNECTIONS SCHEMATIC DIAGRAM

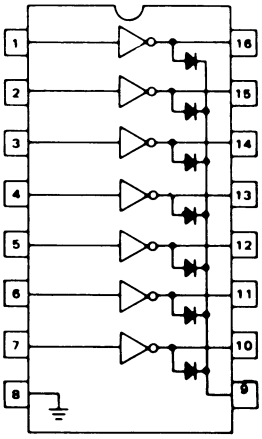

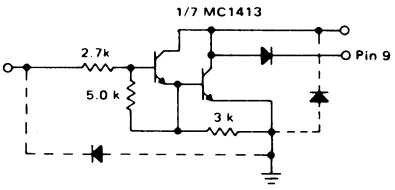

LM324 LOW POWER QUAD OPERATIONAL AMPLIFIERS

CONNECTION DIAGRAM SCHEMATIC DIAGRAM (EACH AMPLIFIER)

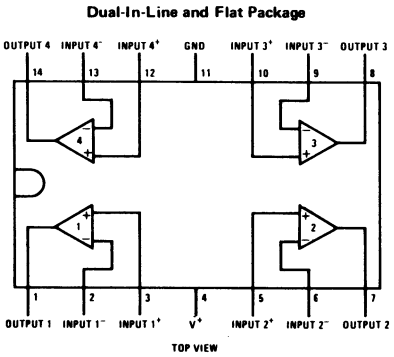

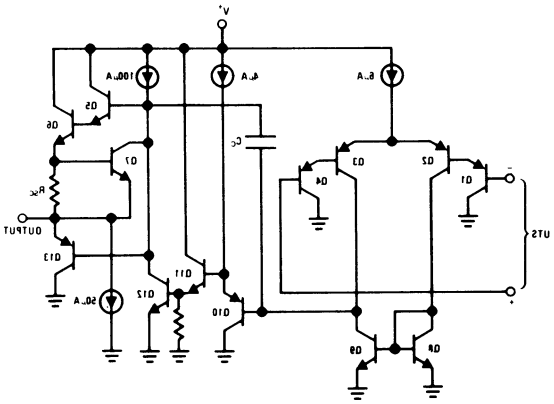

LF347 4 x JFET INPUT OP. AMP.

CONNECTION DIAGRAM SIMPLIFIED SCHEMATIC

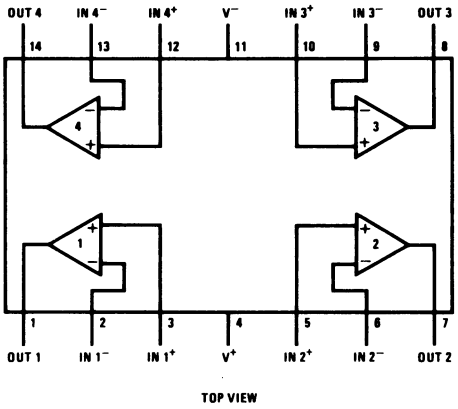

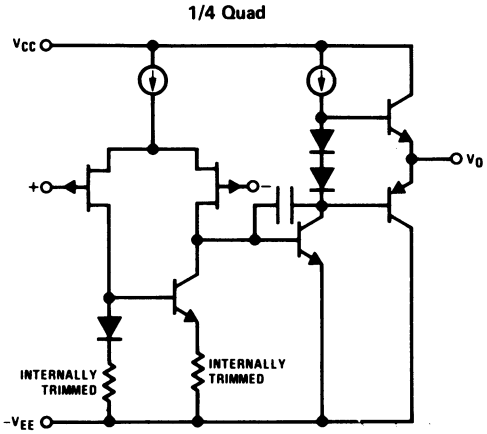

LM393 LOW POWER LOW OFFSET VOLTAGE COMPARATORS

CONNECTION DIAGRAM SCHEMATIC DIAGRAM

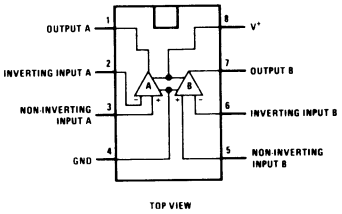

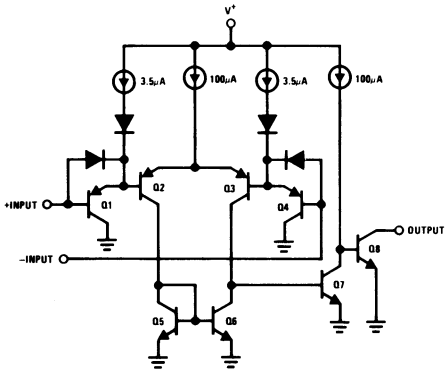

LM358 LOW POWER DUAL OPERATIONAL AMPLIFIERS

CONNECTION DIAGRAM (TOP VIEW) SCHEMATIC DIAGRAM (EACH AMPLIFIER)

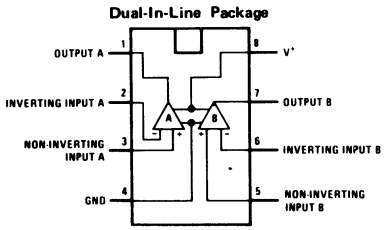

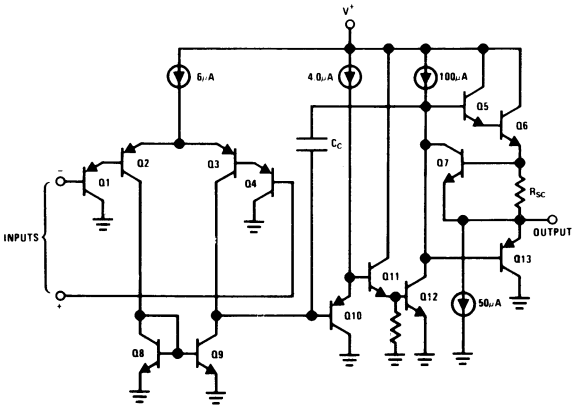

LM3046 TRANSISTOR ARRAYS

SCHEMATIC AND CONNECTION DIAGRAM

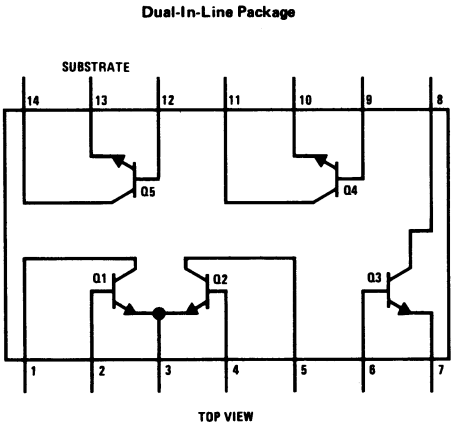

SN74LS290
DECADE COUNTER

(TOP VIEW)

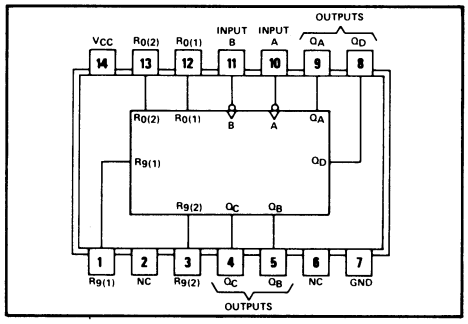

SN74LS293
BINARY COUNTER

(TOP VIEW)

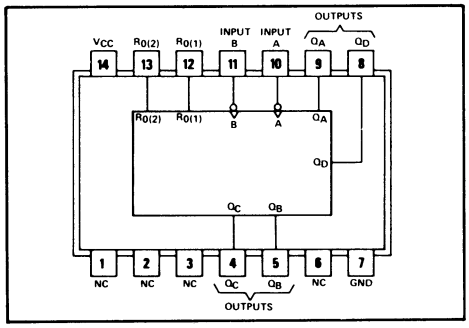

FUNCTIONAL BLOCK DIAGRAM LS290

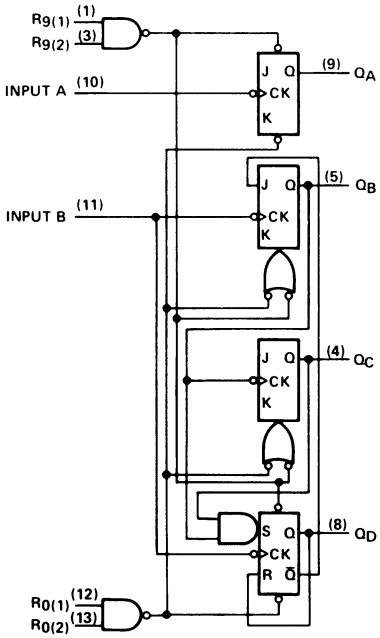

FUNCTIONAL BLOCK DIAGRAM LS293

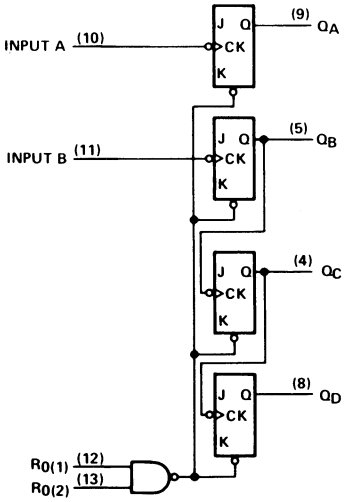

SN74LS113AN
DUAL J-K FLIP-FLOP

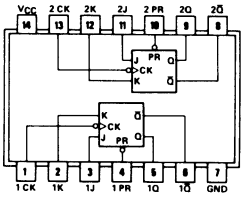

SN74LS10N
TRIPLE 3-INPUT NAND GATES

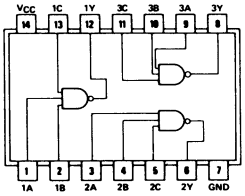

MC14013B DUAL TYPE D FLIP-FLOP

BLOCK DIAGRAM LOGIC DIAGRAM

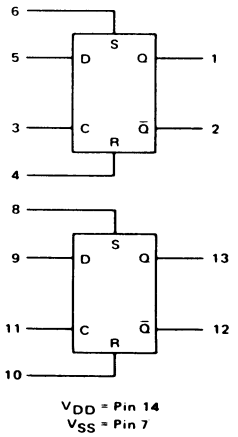

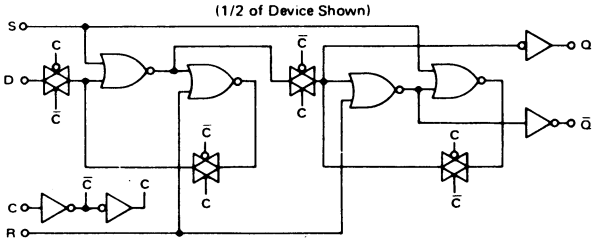

MC14094B 8-STAGE SHIFT/STORE REGISTER

PIN ARRANGEMENT

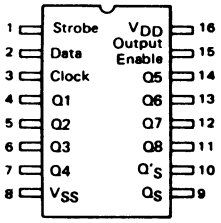

BLOCK DIAGRAM

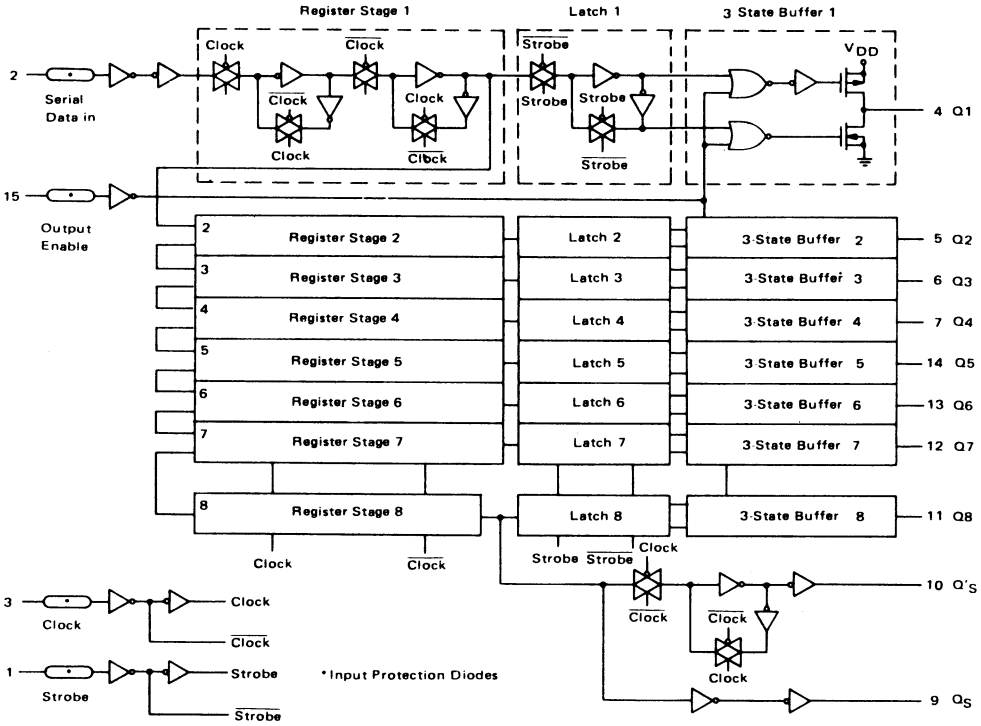

MC14569B HIGH SPEED PROGRAMABLE DIVIDE-BY-N DUAL 4 BIT BCD/BINARY COUNTER

PIN ARRANGEMENT

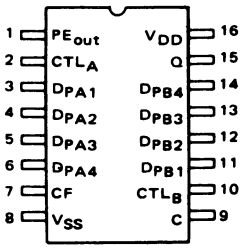

BLOCK DIAGRAM

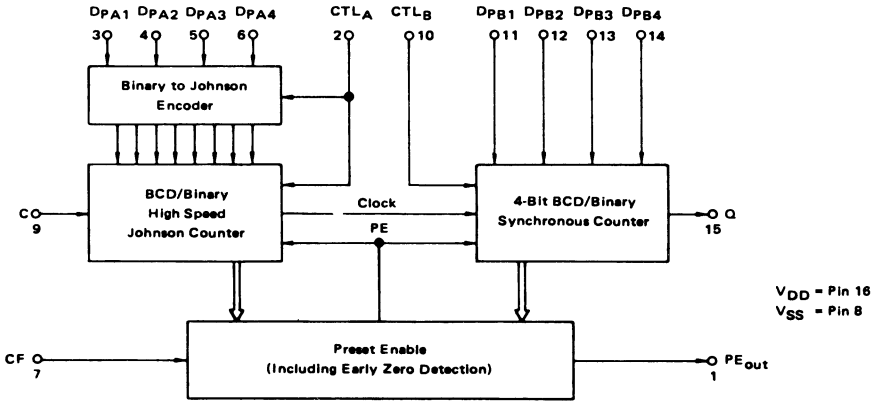

MC14066B QUAD ANALOG SWITCH QUAD MULTIPLEXER

BLOCK DIAGRAM

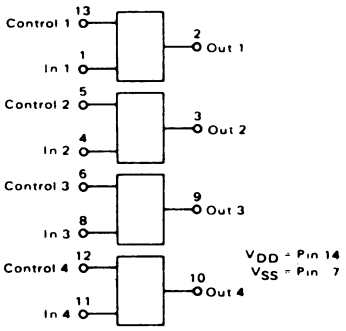

CIRCUIT SCHEMATIC

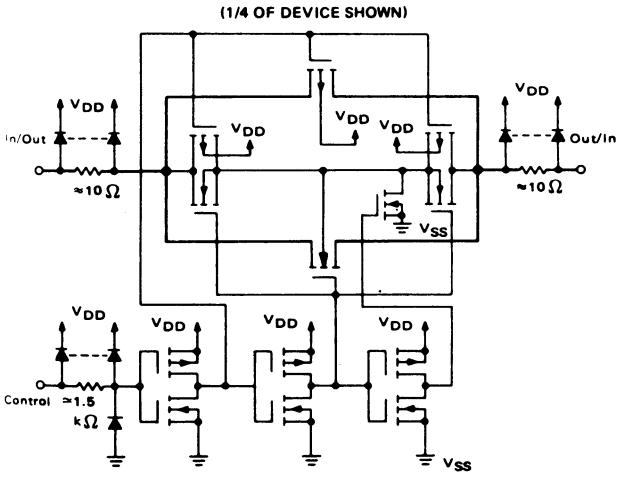

TDA2002 AF POWER AMP.
CONNECTION DIAGRAM

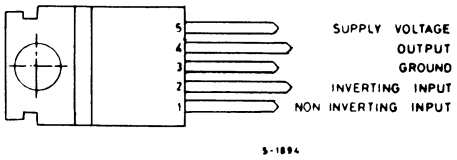

SCHEMATIC DIAGRAM

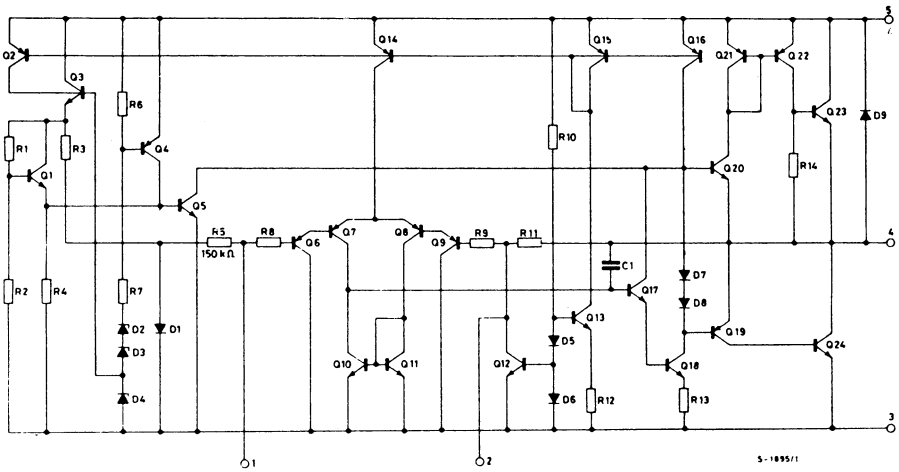

MC12015 TWO-MODULUS PRESCALER
PRESCALER BLOCK DIAGRAM

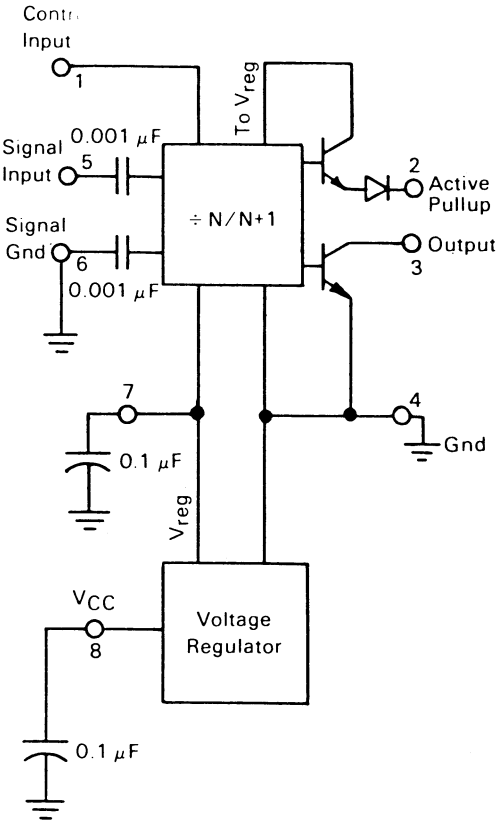

MC14069UB HEX INVERTER
LOGIC DIAGRAM

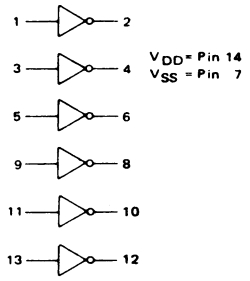

CIRCUIT SCHEMATIC

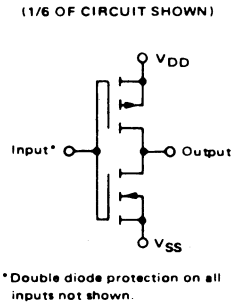

CONTENTS

5 PARTS LIST

MAIN CHASSIS RT2047/D — MODULE 800 — S.P.RADIO A/S — VHF RADIOTELEFON DUPLEX — 862047

POSITION	DESCRIPTION		MANUFACTOR	TYPE	PART NO.
-1/100	RECEIVER	MODULE 100	ECI A/S	4-6-32127B /4-0-32127B	600009
-2/200	RX-SYNTHESISER	MODULE 200	ECI A/S	5-0-23694D	600012
-3/300	TX-EXCITER	MODULE 300	ECI A/S	5-0-23695D	600100
-4/400	TX-POWER AMPLIFIER	MODULE 400 & 500	ECI A/S	5-0-23973B	600013
-6/600	INTERFACE UNIT	MODULE 6/600	ECI A/S	5-0-27746D/4-0-27746D	627746
-7/700	KEYBOARD UNIT	MODULE 7/700	ECI A/S	5-0-27747C/4-0-27747B	627747
-9/900	FILTER UNIT	MODULE 700	ECI A/S		727749
VARIOUS	MICROTELEPHONE FOR	CRY2001, RT2048 & RE2100	ECI A/S	700118 MICROTELEPHONE	700118
C801	CAPACITOR CERAMIC	470pF 10% 400VDC	KCK	HM60 SJ YB 471 K	16.096
C802	CAPACITOR CERAMIC	470pF 10% 400VDC	KCK	HM60 SJ YB 471 K	16.096
C803	CAPACITOR CERAMIC	1nF -20/+80% 400V	FERROPERM	9/0138,9 U/LAK+TR•D	16.152
C804	CAPACITOR CERAMIC	470pF 10% 400VDC	KCK	HM60 SJ YB 471 K	16.096
C805	CAPACITOR CERAMIC	470pF 10% 400VDC	KCK	HM60 SJ YB 471 K	16.096
C806	CAPACITOR CERAMIC	4n7F -20/80% 500VDC CL2	KCK	HM11 SJ YE 472 Z	16.155
DF801	DUPLEX FILTER	DF 801	ECI A/S	DF 801	700084
J801	ANTENNA JACK (FEMALE)	SO239	KAJ V HANSEN	SO239	78.504
J802	SUPPLY JACK (FEMALE)	MEK 60 BZ	HIRSCHMANN	973025-100	78.309
J803	SOCKET SUB D 9 POLES	SOLDER VERSION 4-40 NUT	EDA INC.	8SO-009SS-204T	78.172
LS801	LOUDSPEAKER	8 OHM	VIFA	S06FB-03-08	46.040
P801	AERIAL PLUG	PL259	* RODAN	PL259/LODDE/TEFLON INDER	78.502
P802	SUPPLY JACK (MALE)	MESEI 60	HIRSCHMANN	973020-100	78.320
R801	RESISTOR MF	15k OHM 5% 0.4W	PHILIPS	2322 181 53153	01.229

MICROTELEPHONE w. CRADLE — CRY2001/RE2100/RT2048 — ECI A/S — 3-0-25772 — 725772

POSITION	DESCRIPTION		MANUFACTOR	TYPE	PART NO.
VARIOUS	HANDSET HOLDER		KORONA PLAST	0-3-29132A	48.669
VARIOUS	MICROTELEPHONE FOR	CRY2001, RT2048 & RE2100	ECI A/S	700118 MICROTELEPHONE	700118
VARIOUS	LOCKING SCREW f. DCONN.		SOURIAU	8630-05	78.755

RECEIVERMODULE 100 — ECI A/S — 4-6-32127B /4-0-32127B — 600009

POSITION	DESCRIPTION		MANUFACTOR	TYPE	PART NO.
C101	CAPACITOR CERAMIC	2p7F +/-0.1pF NPO 250VDC	FERROPERM	2.7pF +/- 0.1pF 9/0112.9-	15.516
C102	CAPACITOR CERAMIC	10pF 5% NPO 500VDC	KCK	RT-HM60 SK CH 100 J	15.565
C103	CAPACITOR CERAMIC	6p8F +-0.25pF NPO 500VDC	KCK	RT-HM60 SK CH 6R8 C	15.023
C104	RECEIVER (100) RT2047			5-0-32127B / 1-0-32127A	51.783
C105	CAPACITOR CERAMIC	6p8F +-0.25pF NPO 500VDC	KCK	RT-HM60 SK CH 6R8 C	15.023
C106	CAPACITOR CERAMIC	470pF 10% 500VDC	KCK	RT-HM60 SK YB 471 K	16.095
C107	CAPACITOR CERAMIC	2p7F +/-0.1pF NPO 250VDC	FERROPERM	2.7pF +/- 0.1pF 9/0112.9-	15.516
C108	CAPACITOR CERAMIC	10pF 5% NPO 500VDC	KCK	RT-HM60 SK CH 100 J	15.565
C109	CAPACITOR CERAMIC	470pF 10% 500VDC	KCK	RT-HM60 SK YB 471 K	16.095
C110	CAPACITOR CERAMIC	470pF 10% 500VDC	KCK	RT-HM60 SK YB 471 K	16.095
C111	CAPACITOR CERAMIC	5p1F +/-0.25pF NPO 500VDC	KCK	RT-HM60-SK CH 5R1 C	15.539
C112	CAPACITOR CERAMIC	8p2F +-0.25pF NPO 500VDC	KCK	RT-HM60 SK 8R2 C	15.030
C113	RECEIVER (100) RT2047			5-0-32127B / 1-0-32127A	51.783
C114	CAPACITOR CERAMIC	470pF 10% 500VDC	KCK	RT-HM60 SK YB 471 K	16.095
C115	CAPACITOR CERAMIC	8p2F +-0.25pF NPO 500VDC	KCK	RT-HM60 SK 8R2 C	15.030
C116	CAPACITOR CERAMIC	2p2F +/-0.1pF NPO 400VDC	FERROPERM	2.2pF +/- 0.1pF 9/0112.9-	15.513
C117	CAPACITOR CERAMIC	390P 25V 5% N150	FERROPERM	9/0216,8	15.800
C118	CAPACITOR MKT	4n7F 10% 63VDC	PHILIPS	2222 370 88472	11.374
C119			FERROPERM	9/0216,8	15.778
C120	CAPACITOR CERAMIC	470pF 10% 500VDC	KCK	RT-HM60 SK YB 471 K	16.095
C121	CAPACITOR MKT	4n7F 10% 63VDC	PHILIPS	2222 370 88472	11.374
C122	CAPACITOR CERAMIC	33pF 5% N150 50VDC	KCK	RT-HE50 SK PH 330 J	15.092
C123	CAPACITOR CERAMIC	100pF 5% N33 25V	#FERROPERM	9/0213,8	15.781
C124	CAPACITOR MKT	10nF 10% 400V	SIEMENS	B32510-D6103-K000	11.381
C125	CAPACITOR CERAMIC	15pF 5% NPO 500VDC	KCK	RT-HM60 SK CH 150 J	15.590
C126	CAPACITOR MKT	10nF 10% 400V	SIEMENS	B32510-D6103-K000	11.381
C127	CAPACITOR MKT	10nF 10% 400V	SIEMENS	B32510-D6103-K000	11.381
C128	CAPACITOR MKT	100nF 10% 63VDC	PHILIPS	2222 370 75104 (78104)	11.136
C129	CAPACITOR POLYSTYRENE	240pF 1% 630VDC	PHILIPS	2222 431 82401	10.410

POSITION	DESCRIPTION		MANUFACTOR	TYPE	PART NO.
C130	CAPACITOR CERAMIC	33pF 5% N150 50VDC	KCK	RT-HE50 SK PH 330 J	15.092
C131	CAPACITOR POLYSTERENE	120pF 1% 630V	#PHILIPS	2222 431 81201	10.403
C132	CAPACITOR MKT	100nF 10% 63VDC	PHILIPS	2222 370 75104 (78104)	11.136
C133	CAPACITOR MKT	100nF 10% 63VDC	PHILIPS	2222 370 75104 (78104)	11.136
C134	CAPACITOR POLYSTYRENE	180pF 1% 630VDC	PHILIPS	2222 431 81801	10.407
C135	CAPACITOR MKT	100nF 10% 63VDC	PHILIPS	2222 370 75104 (78104)	11.136
C136	CAPACITOR MKT	330nF 5% 63VDC	PHILIPS	2222 370 79334	11.184
C137	CAPACITOR ELECTROLYTIC	10uF 20% 35VDC	ERO	EKI 00 AA 210 F M5K	14.512
C138	CAPACITOR ELECTROLYTIC	10uF 20% 35VDC	ERO	EKI 00 AA 210 F M5K	14.512
C139	CAPACITOR ELECTROLYTIC	10uF 20% 35VDC	ERO	EKI 00 AA 210 F M5K	14.512
C140	CAPACITOR ELECTROLYTIC	10uF 20% 35VDC	ERO	EKI 00 AA 210 F M5K	14.512
C141	CAPACITOR MKT	100nF 10% 63VDC	PHILIPS	2222 370 75104 (78104)	11.136
C142	CAPACITOR ELECTROLYTIC	10uF 20% 35VDC	ERO	EKI 00 AA 210 F M5K	14.512
C143	CAPACITOR CERAMIC	1nF 10% 50VDC CL2	KCK	RT-SK-HE50 SJYB 102 K	16.160
C144	CAPACITOR CERAMIC	1nF 10% 50VDC CL2	KCK	RT-SK-HE50 SJYB 102 K	16.160
C145	CAPACITOR CERAMIC	10nF -20/+80% CL2 50VDC	KCK	RT-HE70 SK YF 103 Z	15.170
D101	DIODE CAPASITANCE	13pF/9VDC	TOSHIBA	1SV101 in matched group	26.135
D102	DIODE CAPASITANCE	13pF/9VDC	TOSHIBA	1SV101 in matched group	26.135
D103	DIODE CAPASITANCE	13pF/9VDC	TOSHIBA	1SV101 in matched group	26.135
D104	DIODE CAPASITANCE	13pF/9VDC	TOSHIBA	1SV101 in matched group	26.135
FL101	CRYSTAL FILTER	21.4 MHz	NDK	21F15DH	40.022
FL102				STETT, CFU 455 D2	81004552
U101	NBFM IF SYSTEM	MC3361	PHILIPS	MC 3361 N	31.325
U102	POS. VOLTAGE REG. FIXED	5V/0.1A 78L05AC	MOTOROLA	MC78L05ACP RA	31.135
L101	COIL	TL355	ECI A/S	6-0-23627	400355
L102	COIL	TL356	ECI A/S	6-0-23628	400356
L103	COIL	TL357	ECI A/S	6-0-23629	400357
L104	COIL	TL358	ECI A/S	6-0-23630	400358
L105	COIL	TL360	ECI A/S	6-0-23632A	400360
L106	COIL	TL361	ECI A/S	6-0-23633	400361
L107	CHOKE FIXED	4u7H 10%	SIEMENS	B78108-T1472-K	20.355
L108	COIL RF 568nH ADJUSTABLE		SUMIDA ELEC.CO.	P-75B / 2175-2239-1025	38.432
L111	COIL	TL359	ECI A/S	6-0-23631	400359
R101	RESISTOR MF	33k OHM 5% 0.4W	PHILIPS	2322 181 53333	01.237
R102	RESISTOR MF	33k OHM 5% 0.4W	PHILIPS	2322 181 53333	01.237
R103	RESISTOR MF	180 OHM 5% 0.4W	PHILIPS	2322 181 53181	01.181
R104	RESISTOR MF	1k5 OHM 5% 0.4W	PHILIPS	2322 181 53152	01.204
R105	RESISTOR MF	4k7 OHM 5% 0.4W	PHILIPS	2322 181 53472	01.216
R106	RESISTOR MF	33k OHM 5% 0.4W	PHILIPS	2322 181 53333	01.237
R107	RESISTOR MF	33k OHM 5% 0.4W	PHILIPS	2322 181 53333	01.237
R108	RESISTOR MF	330 OHM 5% 0.4W	PHILIPS	2322 181 53331	01.187
R109	RESISTOR MF	1k2 OHM 5% 0.4W	PHILIPS	2322 181 53122	01.202
R110	RESISTOR MF	3k9 OHM 5% 0.4W S	BEYSCHLAG	MUB 0207-50-5%-3k9	01.714
R111	RESISTOR MF	82 OHM 5% 0.4W	PHILIPS	2322 181 53829	01.172
R112	RESISTOR MF	2k2 OHM 5% 0.4W	PHILIPS	2322 181 53222	01.208
R113	RESISTOR MF	12k OHM 5% 0.4W	PHILIPS	2322 181 53123	01.227
R114	RESISTOR MF	10k OHM 5% 0.4W	PHILIPS	2322 181 53103	01.225
R115	RESISTOR MF	10 OHM 5% 0.4W S	BEYSCHLAG	MUB 0207-50-5%-10R	01.650
R116	RESISTOR MF	150 OHM 5% 0.4W S	BEYSCHLAG	MUB 0207-50-5%-150R	01.679
R117	RESISTOR MF	150 OHM 5% 0.4W	PHILIPS	2322 181 53151	01.179
R118	RESISTOR MF	5k36 OHM 1% 0.6W	PHILIPS	2322 156 15362	03.418
R119	RESISTOR MF	1k5 OHM 5% 0.4W	PHILIPS	2322 181 53152	01.204
R120	RESISTOR MF	43k OHM 5% 0.4W	PHILIPS	2322 181 53433	01.240
R121	RESISTOR MF	3k9 OHM 5% 0.4W	PHILIPS	2322 181 53392	01.214
R122	RESISTOR MF	47k OHM 5% 0.4W	PHILIPS	2322 181 53473	01.241
R123	RESISTOR MF	27k OHM 5% 0.4W	PHILIPS	2322 181 53273	01.235
R124	RESISTOR MF	27k OHM 5% 0.4W	PHILIPS	2322 181 53273	01.235
R125	RESISTOR MF	10k OHM 5% 0.4W	PHILIPS	2322 181 53103	01.225
R126	RESISTOR MF	10k OHM 5% 0.4W	PHILIPS	2322 181 53103	01.225
R127	RESISTOR MF	220 OHM 5% 0.4W	PHILIPS	2322 181 53221	01.183
R128	RESISTOR MF	470 OHM 5% 0.4W	PHILIPS	2322 181 53471	01.191
R129	RESISTOR MF	220 OHM 5% 0.4W	PHILIPS	2322 181 53221	01.183
Q101	TRANSISTOR RF	LOW POWER PNP BF979/BF479	TELEFUNKEN AG	BF979	28.250
Q102	TRANSISTOR N-CHAN. JFET	TIS88A2	MOTOROLA	TM00 044-2	29.736
Q103	TRANSISTOR MOSFET	BF961	TFK*	BF961	29.755
Q104	TRANSISTOR AF	BC547B NPN TO-92	MOT.	BC547BZL1	28.067
X101				20,9450MHZ 20PPM HC43/U	38350131

POSITION	DESCRIPTION		MANUFACTOR	TYPE	PART NO.
RX-SYNTHESISER		**MODULE 200**	**ECI A/S**	**5-0-23694D**	**600012**

POSITION	DESCRIPTION		MANUFACTOR	TYPE	PART NO.
C201	CAPACITOR CERAMIC	220pF 10% 500VDC CL2	KCK	RT-HM60-SK YB 221 K	16.090
C202	CAPACITOR CERAMIC	220pF 10% 500VDC CL2	KCK	RT-HM60-SK YB 221 K	16.090
C203	CAPACITOR CERAMIC	220pF 10% 500VDC CL2	KCK	RT-HM60-SK YB 221 K	16.090
C204	CAPACITOR CERAMIC	220pF 10% 500VDC CL2	KCK	RT-HM60-SK YB 221 K	16.090
C205	CAPACITOR CERAMIC	220pF 10% 500VDC CL2	KCK	RT-HM60-SK YB 221 K	16.090
C206	CAPACITOR CERAMIC	27pF 5% N150 50VDC	KCK	RT-HE50 SK PH 270 J	15.812
C207	CAPACITOR CERAMIC	10pF 5% NPO 500VDC	KCK	RT-HM60 SK CH 100 J	15.565
C208	CAPACITOR CERAMIC	27pF 5% N150 50VDC	KCK	RT-HE50 SK PH 270 J	15.812
C209	CAPACITOR CERAMIC	27pF 5% N150 50VDC	KCK	RT-HE50 SK PH 270 J	15.812
C210	CAPACITOR CERAMIC	220pF 10% 500VDC CL2	KCK	RT-HM60-SK YB 221 K	16.090
C211	CAPACITOR ELECTROLYTIC	33uF 20% 16VDC	ERO	EKI 00 AA 233 D M5K	14.518
C212	CAPACITOR CERAMIC	220pF 10% 500VDC CL2	KCK	RT-HM60-SK YB 221 K	16.090
C213	CAPACITOR CERAMIC	220pF 10% 500VDC CL2	KCK	RT-HM60-SK YB 221 K	16.090
C214	CAPACITOR CERAMIC	16pF 5% N150 50VDC	KCK	RT-HE40-SK PH 160 J	15.057
C215	CAPACITOR CERAMIC	220pF 10% 500VDC CL2	KCK	RT-HM60-SK YB 221 K	16.090
C216	CAPACITOR CERAMIC	220pF 10% 500VDC CL2	KCK	RT-HM60-SK YB 221 K	16.090
C217	CAPACITOR CERAMIC	15pF 5% NPO 500VDC	KCK	RT-HM60 SK CH 150 J	15.590
C218	CAPACITOR POLYESTER	150nF 10% 100VDC	PHILIPS	2222 372 28154	11.074
C219	CAPACITOR POLYESTER	68nF 10% 250V	ERO	MKT1822	11.102
C220	CAPACITOR POLYSTYRENE	820pF 1% 250VDC	PHILIPS	2222 430 88201	10.348
C221	CAPACITOR CERAMIC	220pF 10% 500VDC CL2	KCK	RT-HM60-SK YB 221 K	16.090
C222	CAPACITOR CERAMIC	22pF 5% N150 500VDC	KCK	RT-HM SK PH 220 J	15.062
C223	CAPACITOR POLYESTER	68nF 10% 250V	ERO	MKT1822	11.102
C224	CAPACITOR CERAMIC	220pF 10% 500VDC CL2	KCK	RT-HM60-SK YB 221 K	16.090
C225	CAPACITOR MKT	2u2F 10% 100VDC	ERO	MKT 1822-522/01 5 R	11.142
C226	CAPACITOR CERAMIC	100pF 5% N150 500V	#KCK	HM11SJPH101J	15.132
C227	CAPACITOR CERAMIC	1nF 10% 50VDC CL2	KCK	RT-SK-HE50 SJYB 102 K	16.160
C228	CAPACITOR CERAMIC	1nF 10% 50VDC CL2	KCK	RT-SK-HE50 SJYB 102 K	16.160
C229	CAPACITOR ELECTROLYTIC	33uF 20% 16VDC	ERO	EKI 00 AA 233 D M5K	14.518
C230	CAPACITOR MKT	100nF 10% 100VDC	ERO	MKT 1822-410/01 5	11.073
C231	CAPACITOR CERAMIC	1nF 10% 50VDC CL2	KCK	RT-SK-HE50 SJYB 102 K	16.160
C232	CAPACITOR CERAMIC	100nF 10% 50V	SIEMENS	B37987-F5104-K000	16.305
C233	CAPACITOR POLYESTER	0.22uF 10% 100V	PHILIPS*	2222 369 28224	11.075
C234	CAPACITOR ELECTROLYTIC	33uF 20% 16VDC	ERO	EKI 00 AA 233 D M5K	14.518
C235	CAPACITOR ELECTROLYTIC	33uF 20% 16VDC	ERO	EKI 00 AA 233 D M5K	14.518
C236	CAPACITOR CERAMIC	33pF 5% N150 400V	#KCK	HM74SJPH330J	15.083
C237	CAPACITOR CERAMIC	220pF 10% 500VDC CL2	KCK	RT-HM60-SK YB 221 K	16.090
C238	CAPACITOR CERAMIC	220pF 10% 500VDC CL2	KCK	RT-HM60-SK YB 221 K	16.090
C239	CAPACITOR CERAMIC	220pF 10% 500VDC CL2	KCK	RT-HM60-SK YB 221 K	16.090
C240	CAPACITOR CERAMIC	220pF 10% 500VDC CL2	KCK	RT-HM60-SK YB 221 K	16.090
C241	CAPACITOR CERAMIC	220pF 10% 500VDC CL2	KCK	RT-HM60-SK YB 221 K	16.090
C242	CAPACITOR CERAMIC	220pF 10% 500VDC CL2	KCK	RT-HM60-SK YB 221 K	16.090
C243	CAPACITOR CERAMIC	220pF 10% 500VDC CL2	KCK	RT-HM60-SK YB 221 K	16.090
C244	CAPACITOR CERAMIC	220pF 10% 500VDC CL2	KCK	RT-HM60-SK YB 221 K	16.090
C245	CAPACITOR ELECTROLYTIC	33uF 20% 16VDC	ERO	EKI 00 AA 233 D M5K	14.518
C246	CAPACITOR CERAMIC	220pF 10% 500VDC CL2	KCK	RT-HM60-SK YB 221 K	16.090
C247	CAPACITOR CERAMIC	220pF 10% 500VDC CL2	KCK	RT-HM60-SK YB 221 K	16.090
D201	DIODE CAPASITANCE	13pF/9VDC	TOSHIBA	1SV101 in matched group	26.135
D202	DIODE	BAW62 HIGH SPEED	PHILIPS	BAW62-143	25.350
D203	DIODE	BAW62 HIGH SPEED	PHILIPS	BAW62-143	25.350
D204	DIODE	BAW62 HIGH SPEED	PHILIPS	BAW62-143	25.350
IC201	INTEGRATED CIRCUIT	MC12015P	MOTOROLA	MC12015P	32.850
IC202	INTEGRATED CIRCUIT	4BIT SER.INP.PLL SYNTHES	MOTOROLA	SC145146P	33.490
L205	CHOKE	4u7H 10%	SIEMENS	B78108-T1472-K	20.137
R201	RESISTOR MF	1k5 OHM 5% 0.4W S	BEYSCHLAG	MUB 0207-50-5%-1k5	01.704
R202	RESISTOR MF	1k0 OHM 5% 0.4W S	BEYSCHLAG	MUB 0207-50-5%-1k0	01.700
R203	RESISTOR MF	68 OHM 5% 0.4W S	BEYSCHLAG	MUB 0207-50-5%-68R	01.670
R204	RESISTOR MF	33 OHM 5% 0.4W	PHILIPS	2322 181 53339	01.162
R205	RESISTOR MF	68 OHM 5% 0.4W	PHILIPS	2322 181 53689	01.170
R206	RESISTOR MF	390 OHM 5% 0.4W	PHILIPS	2322 181 53391	01.189
R207	RESISTOR MF	560 OHM 5% 0.4W	PHILIPS	2322 181 53561	01.193
R208	RESISTOR MF	560 OHM 5% 0.4W	PHILIPS	2322 181 53561	01.193
R209	POTENTIOMETER TRIMMING	470 OHM 10% 0.5W	PHILIPS*	2322 484 75471	07.651
R210	RESISTOR MF	56k OHM 5% 0.4W	PHILIPS	2322 181 53563	01.243
R211	RESISTOR MF	33 OHM 5% 0.4W	PHILIPS	2322 181 53339	01.162
R212	RESISTOR MF	5k6 OHM 5% 0.4W S	BEYSCHLAG	MUB 0207-50-5%-5k6	01.718
R213	RESISTOR MF	1k0 OHM 5% 0.4W	PHILIPS	2322 181 53102	01.200
R214	RESISTOR MF	68 OHM 5% 0.4W	PHILIPS	2322 181 53689	01.170

POSITION	DESCRIPTION		MANUFACTOR	TYPE	PART NO.
R215	RESISTOR MF	330 OHM 5% 0.4W	PHILIPS	2322 181 53331	01.187
R216	RESISTOR MF	1k5 OHM 5% 0.4W	PHILIPS	2322 181 53152	01.204
R217	RESISTOR MF	1k0 OHM 5% 0.4W	PHILIPS	2322 181 53102	01.200
R218	RESISTOR MF	27 OHM 5% 0.4W	PHILIPS	2322 181 53279	01.160
R219	RESISTOR MF	180 OHM 5% 0.4W	PHILIPS	2322 181 53181	01.181
R220	RESISTOR MF	4k7 OHM 5% 0.4W S	BEYSCHLAG	MUB 0207-50-5%-4k7	01.716
R221	RESISTOR MF	4k7 OHM 5% 0.4W	PHILIPS	2322 181 53472	01.216
R222	RESISTOR MF	6k8 OHM 5% 0.4W	PHILIPS	2322 181 53682	01.220
R223	RESISTOR MF	10k OHM 5% 0.4W	PHILIPS	2322 181 53103	01.225
R224	RESISTOR MF	390k OHM 5% 0.4W	PHILIPS	2322 181 53394	01.264
R225	RESISTOR MF	100 OHM 5% 0.4W	PHILIPS	2322 181 53101	01.175
R226	RESISTOR MF	820 OHM 5% 0.4W	PHILIPS	2322 181 53821	01.197
R227	RESISTOR MF	390 OHM 5% 0.4W	PHILIPS	2322 181 53391	01.189
R228	RESISTOR MF	120 OHM 5% 0.4W S	BEYSCHLAG	MUB 0207-50-5%-120R	01.677
R229	RESISTOR MF	1k0 OHM 5% 0.4W	PHILIPS	2322 181 53102	01.200
R230	RESISTOR MF	3k3 OHM 5% 0.4W	PHILIPS	2322 181 53332	01.212
R231	RESISTOR MF	12k OHM 5% 0.4W	PHILIPS	2322 181 53123	01.227
R232	RESISTOR MF	3k3 OHM 5% 0.4W	PHILIPS	2322 181 53332	01.212
R233	RESISTOR MF	2k2 OHM 5% 0.4W	PHILIPS	2322 181 53222	01.208
R234	RESISTOR MF	120 OHM 5% 0.4W	PHILIPS	2322 181 53121	01.177
T201	TRANSISTOR RF	BFW92A	TFK	BFW92A	29.160
T202	TRANSISTOR JFET	TIS88A3 TO-92	MOTORPLA	TM 00 044-3	29.737
T203	TRANSISTOR AF	BC548B NPN TO-92	PHILIPS	BC548B-126	28.076
T204	TRANSISTOR RF	BFW92A	TFK	BFW92A	29.160
T205	TRANSISTOR AF	BC558B	ITT/MOT	BC558B	28.100
T206	TRANSISTOR AF	BC548B NPN TO-92	PHILIPS	BC548B-126	28.076
T207	TRANSISTOR	BC549B	PHILIPS*	BC549B-126	28.080
T208	TRANSISTOR	BC549B	PHILIPS*	BC549B-126	28.080
T209	TRANSISTOR AF	BC548B NPN TO-92	PHILIPS	BC548B-126	28.076
T210	TRANSISTOR AF	BC558B	ITT/MOT	BC558B	28.100
L201	COIL	TL370	S.P.RADIO	6-0-23686	400370
L202	COIL	TL368	ECI A/S	6-0-23592	400368
L203	COIL	TL375	ECI A/S	6-0-23696B	400375
L204	COIL	TL376	S.P.RADIO	6-0-23697C	400376
L206	COIL	TL369	S.P.RADIO	6-0-23662	400369
L207	COIL	TL371	ECI A/S	6-0-23687	400371

TX-EXCITER	MODULE 300	ECI A/S	5-0-23695D	600100

POSITION	DESCRIPTION		MANUFACTOR	TYPE	PART NO.
C301	CAPACITOR CERAMIC	4n7F 20% CL2 50VDC	KCK	RT-HE80-SK YD 472 M	15.165
C302	CAPACITOR CERAMIC	220pF 10% 500VDC CL2	KCK	RT-HM60-SK YB 221 K	16.090
C303	CAPACITOR CERAMIC	39pF 5% N150 500V	#KCK	HM74SJPH390J	15.095
C304	CAPACITOR CERAMIC	220pF 10% 500VDC CL2	KCK	RT-HM60-SK YB 221 K	16.090
C305	CAPACITOR CERAMIC	220pF 10% 500VDC CL2	KCK	RT-HM60-SK YB 221 K	16.090
C306	CAPACITOR CERAMIC	220pF 10% 500VDC CL2	KCK	RT-HM60-SK YB 221 K	16.090
C307	CAPACITOR CERAMIC	33pF 5% N150 400V	#KCK	HM74SJPH330J	15.083
C308	CAPACITOR CERAMIC	220pF 10% 500VDC CL2	KCK	RT-HM60-SK YB 221 K	16.090
C309	CAPACITOR CERAMIC	10nF -20/+80% CL2 50VDC	KCK	RT-HE70 SK YF 103 Z	15.170
C310	CAPACITOR CERAMIC	18pF 5% NPO 500VDC	KCK	RT-HM60 SK CH 180 J	15.060
C311	CAPACITOR CERAMIC	15pF 5% NPO 500VDC	KCK	RT-HM60 SK CH 150 J	15.590
C312	CAPACITOR MKT	10nF 10% 400V	SIEMENS	B32510-D6103-K000	11.381
C313	CAPACITOR MKT	10nF 10% 400V	SIEMENS	B32510-D6103-K000	11.381
C314	CAPACITOR MKT	10nF 10% 400V	SIEMENS	B32510-D6103-K000	11.381
C315	CAPACITOR MKT	220nF 10% 100V	SIEMENS	B32510-D1224-K000	11.225
C316	CAPACITOR CERAMIC	220pF 10% 500VDC CL2	KCK	RT-HM60-SK YB 221 K	16.090
C317	CAPACITOR CERAMIC	220pF 10% 500VDC CL2	KCK	RT-HM60-SK YB 221 K	16.090
C318	CAPACITOR CERAMIC	220pF 10% 500VDC CL2	KCK	RT-HM60-SK YB 221 K	16.090
C319	CAPACITOR MKT	220nF 10% 100V	SIEMENS	B32510-D1224-K000	11.225
C320	CAPACITOR CERAMIC	1nF 10% 50VDC CL2	KCK	RT-SK-HE50 SJYB 102 K	16.160
C321	CAPACITOR ELECTROLYTIC	33uF 20% 16VDC	ERO	EKI 00 AA 233 D M5K	14.518
C322	CAPACITOR MKT	10nF 10% 400V	SIEMENS	B32510-D6103-K000	11.381
C323	CAPACITOR CERAMIC	220pF 10% 500VDC CL2	KCK	RT-HM60-SK YB 221 K	16.090
C324	CAPACITOR MKT	10nF 10% 400V	SIEMENS	B32510-D6103-K000	11.381
C325	CAPACITOR POLYSTYRENE	82pF 1% 630V	#PHILIPS	2222 431 88209	10.398
C326	CAPACITOR CERAMIC	180pF 2% N330 100VDC	PHILIPS	2222 689 46181	16.168
C327	CAPACITOR POLYSTYRENE	180pF 1% 630VDC	PHILIPS	2222 431 81801	10.407
C328	CAPACITOR CERAMIC	180pF 2% N330 100VDC	PHILIPS	2222 689 46181	16.168
C329	CAPACITOR MKT	10nF 10% 400V	SIEMENS	B32510-D6103-K000	11.381
C330	CAPACITOR STYROFLEX	47pF 2,5% 160V	SIEMENS	B31063-B1470-H000	10.168

POSITION	DESCRIPTION		MANUFACTOR	TYPE	PART NO.
C331	CAPACITOR TRIMMING	2-18pF PTFE	DAU	107.2901.018	17.100
C332	CAPACITOR CERAMIC	27pF 5% N150 50VDC	KCK	RT-HE50 SK PH 270 J	15.812
C333	CAPACITOR CERAMIC	12pF 5% NPO 500VDC	KCK	RT-HM60-SK CH 120 J	15.575
C334	CAPACITOR CERAMIC	220pF 10% 500VDC CL2	KCK	RT-HM60-SK YB 221 K	16.090
C335	CAPACITOR CERAMIC	220pF 10% 500VDC CL2	KCK	RT-HM60-SK YB 221 K	16.090
C336	CAPACITOR CERAMIC	220pF 10% 500VDC CL2	KCK	RT-HM60-SK YB 221 K	16.090
C337	CAPACITOR ELECTROLYTIC	33uF 20% 16VDC	ERO	EKI 00 AA 233 D M5K	14.518
C338	CAPACITOR CERAMIC	220pF 10% 500VDC CL2	KCK	RT-HM60-SK YB 221 K	16.090
C339	CAPACITOR CERAMIC	220pF 10% 500VDC CL2	KCK	RT-HM60-SK YB 221 K	16.090
C340	CAPACITOR CERAMIC	12pF 5% NPO 500VDC	KCK	RT-HM60-SK CH 120 J	15.575
C341	CAPACITOR CERAMIC	5p1F +/-0.25pF N150 500V	KCK	RT-HM60-SK PH 5R1 C	16.107
C342	CAPACITOR CERAMIC	10pF 5% N150 500VDC	KCK	RT-HM60-SK PH 100 J	16.113
C343	CAPACITOR CERAMIC	220pF 10% 500VDC CL2	KCK	RT-HM60-SK YB 221 K	16.090
C344	CAPACITOR CERAMIC	220pF 10% 500VDC CL2	KCK	RT-HM60-SK YB 221 K	16.090
C345	CAPACITOR CERAMIC	8p2F +/-0.25pF N150 500V	KCK	RT-HM60-SK PH 8R2 C	16.112
C346	CAPACITOR ELECTROLYTIC	4.7uF 20% 50VDC	ERO	EKI 00 AA 147 H M5K	14.510
C347	CAPACITOR MKT	3n3F 5% 400V	SIEMENS	B32520-B6332-J-289	11.371
C348	CAPACITOR MKT	33nF 5% 250V	SIEMENS	B32510-D3333-J000	11.497
C349	CAPACITOR CERAMIC	100pF 5% N150 500V	#KCK	HM11SJPH101J	15.132
C350	CAPACITOR ELECTROLYTIC	1uF 20% 50VDC	ERO	EKI 00 AA 110 H M5K	14.506
C351	CAPACITOR POLYSTYRENE	8,2nF 1% 160V	#PHILIPS	2222 429 88202	10.298
C352	CAPACITOR MKT	10nF 20% 100VDC	PHILIPS	2222 370 38103	11.168
C353	CAPACITOR MKT	100nF 10% 100VDC	PHILIPS	2222 371 28104	11.219
C354	CAPACITOR ELECTROLYTIC	0.22uF 20% 50VDC	ERO	EKI 00 AA 022 H M0E	14.502
C355	CAPACITOR MKT	220nF 10% 100V	SIEMENS	B32510-D1224-K000	11.225
C356	CAPACITOR MKT	10nF 10% 400V	SIEMENS	B32510-D6103-K000	11.381
D301	DIODE	BAW62 HIGH SPEED	PHILIPS	BAW62-143	25.350
D302	DIODE CAPASITANCE	13pF/9VDC	TOSHIBA	1SV101 in matched group	26.135
D303	DIODE	BAW62 HIGH SPEED	PHILIPS	BAW62-143	25.350
FP301	FERRITE BEAD	•3,7x•1.2x3.5mm GRADE 3B	PHILIPS	4322 020 34400	35.180
FP302	FERRITE BEAD	•3.7x•1.2x3.5mm GRADE 4B1	PHILIPS	4322 020 34420	35.181
IC301	INTEGRATED CIRCUIT	SN74LS293N	FAIRCHILD*	74LS293P	34.260
IC302	INTEGRATED CIRCUIT	SN74LS113AN	MOTOROLA*	SN74LS113AN	33.841
IC303	INTEGRATED CIRCUIT	SN74LS10N	TEXAS*	SN74LS10N	33.534
IC304	INTEGRATED CIRCUIT	SN74LS113AN	MOTOROLA*	SN74LS113AN	33.841
IC305	INTEGRATED CIRCUIT	SN74LS113AN	MOTOROLA*	SN74LS113AN	33.841
IC306	DECADE UP COUNTER	SN74LS290N	MOTOROLA	SN74LS290N	34.251
L301	CHOKE	2.2uH 10%	FERROPERM	1582	20.131
L302	CHOKE	15uH 10%	FERROPERM	1582	20.152
L303	CHOKE	15uH 10%	FERROPERM	1582	20.152
L304	CHOKE	1uH 10%	FERROPERM	1582	20.115
L305	CHOKE FIXED	470nH 10%	SIEMENS	B78108-T3471-K	20.075
L306	COIL	TL374	ECI A/S	6-0-23690	400374
L307	COIL	TL373	S.P.RADIO	6-0-23689	400373
L308	COIL	TL372	ECI A/S	6-0-23688	400372
L309	COIL	TL375	ECI A/S	6-0-23696B	400375
L310	COIL	TL376	S.P.RADIO	6-0-23697C	400376
L311	CHOKE	4u7H 10%	SIEMENS	B78108-T1472-K	20.137
R301	RESISTOR MF	47 OHM 5% 0.4W S	BEYSCHLAG	MUB 0207-50-5%-47R	01.666
R302	RESISTOR MF	12 OHM 5% 0.4W	PHILIPS	2322 181 53129	01.152
R303	RESISTOR MF	470 OHM 5% 0.4W S	BEYSCHLAG	MUB 0207-50-5%-470R	01.691
R304	RESISTOR MF	2k2 OHM 5% 0.4W S	BEYSCHLAG	MUB 0207-50-5%-2k2	01.708
R305	RESISTOR MF	56 OHM 5% 0.4W	PHILIPS	2322 181 53569	01.168
R306	RESISTOR MF	2k2 OHM 5% 0.4W S	BEYSCHLAG	MUB 0207-50-5%-2k2	01.708
R307	RESISTOR MF	82 OHM 5% 0.4W	PHILIPS	2322 181 53829	01.172
R308	RESISTOR MF	470 OHM 5% 0.4W S	BEYSCHLAG	MUB 0207-50-5%-470R	01.691
R309	RESISTOR MF	12 OHM 5% 0.4W	PHILIPS	2322 181 53129	01.152
R310	RESISTOR MF	1k5 OHM 5% 0.4W S	BEYSCHLAG	MUB 0207-50-5%-1k5	01.704
R311	RESISTOR MF	3k9 OHM 5% 0.4W	PHILIPS	2322 181 53392	01.214
R312	RESISTOR MF	1k2 OHM 5% 0.4W S	BEYSCHLAG	MUB 0207-50-5%-1k2	01.702
R313	RESISTOR MF	270 OHM 5% 0.4W	PHILIPS	2322 181 53271	01.185
R314	RESISTOR MF	56 OHM 5% 0.4W	PHILIPS	2322 181 53569	01.168
R315	RESISTOR MF	2k2 OHM 5% 0.4W S	BEYSCHLAG	MUB 0207-50-5%-2k2	01.708
R316	RESISTOR MF	33 OHM 5% 0.4W	PHILIPS	2322 181 53339	01.162
R317	RESISTOR MF	82 OHM 5% 0.4W	PHILIPS	2322 181 53829	01.172
R318	RESISTOR MF	560 OHM 5% 0.4W S	BEYSCHLAG	MUB 0207-50-5%-560R	01.693
R319	RESISTOR MF	3k3 OHM 5% 0.4W	PHILIPS	2322 181 53332	01.212
R320	RESISTOR MF	1k0 OHM 5% 0.4W	PHILIPS	2322 181 53102	01.200
R321	RESISTOR MF	47k OHM 5% 0.4W	PHILIPS	2322 181 53473	01.241
R322	RESISTOR MF	2k2 OHM 5% 0.4W S	BEYSCHLAG	MUB 0207-50-5%-2k2	01.708
R323	RESISTOR MF	1k0 OHM 5% 0.4W	PHILIPS	2322 181 53102	01.200
R324	RESISTOR MF	3k3 OHM 5% 0.4W S	BEYSCHLAG	MUB 0207-50-5%-3k3	01.712
R325	RESISTOR MF	390 OHM 5% 0.4W S	BEYSCHLAG	MUB 0207-50-5%-390R	01.689
R326	RESISTOR MF	150 OHM 5% 0.4W	PHILIPS	2322 181 53151	01.179

POSITION	DESCRIPTION		MANUFACTOR	TYPE	PART NO.
R327	RESISTOR MF	1k0 OHM 5% 0.4W	PHILIPS	2322 181 53102	01.200
R328	RESISTOR MF	560 OHM 5% 0.4W S	BEYSCHLAG	MUB 0207-50-5%-560R	01.693
R329	RESISTOR MF	2k2 OHM 5% 0.4W	PHILIPS	2322 181 53222	01.208
R330	RESISTOR MF	10k OHM 5% 0.4W	PHILIPS	2322 181 53103	01.225
R331	RESISTOR MF	15k OHM 5% 0.4W	PHILIPS	2322 181 53153	01.229
R332	RESISTOR MF	10 OHM 5% 0.4W	PHILIPS	2322 181 53109	01.150
R333	RESISTOR MF	330 OHM 5% 0.4W	PHILIPS	2322 181 53331	01.187
R334	RESISTOR MF	33 OHM 5% 0.4W	PHILIPS	2322 181 53339	01.162
R335	RESISTOR MF	22 OHM 5% 0.4W S	BEYSCHLAG	MUB 0207-50-5%-22R	01.658
R336	RESISTOR MF	560 OHM 5% 0.4W	PHILIPS	2322 181 53561	01.193
R337	RESISTOR MF	2k2 OHM 5% 0.4W	PHILIPS	2322 181 53222	01.208
R338	RESISTOR MF	100 OHM 5% 0.4W	PHILIPS	2322 181 53101	01.175
R339	RESISTOR MF	82 OHM 5% 0.4W	PHILIPS	2322 181 53829	01.172
R341	PRESET CERMET	200 OHM 10% 0.5W	BOURNS	3386P-Y91-201	07.884
R342	RESISTOR MF	10k OHM 5% 0.4W	PHILIPS	2322 181 53103	01.225
R343	RESISTOR MF	560 OHM 5% 0.4W	PHILIPS	2322 181 53561	01.193
R344	RESISTOR MF	2k7 OHM 5% 0.4W S	BEYSCHLAG	MUB 0207-50-5%-2k7	01.710
R345	RESISTOR MF	270 OHM 5% 0.4W S	BEYSCHLAG	MUB 0207-50-5%-270R	01.685
R346	RESISTOR MF	2k2 OHM 5% 0.4W S	BEYSCHLAG	MUB 0207-50-5%-2k2	01.708
R347	RESISTOR MF	3k9 OHM 5% 0.4W S	BEYSCHLAG	MUB 0207-50-5%-3k9	01.714
R348	RESISTOR MF	10k OHM 5% 0.4W	PHILIPS	2322 181 53103	01.225
R349	RESISTOR MF	6k81 OHM 1% 0.6W	PHILIPS	2322 156 16812	03.419
R350	RESISTOR MF	6k81 OHM 1% 0.6W	PHILIPS	2322 156 16812	03.419
R351	RESISTOR MF	82 OHM 5% 0.4W S	BEYSCHLAG	MUB 0207-50-5%-82R	01.672
R352	RESISTOR MF	1k18 OHM 1% 0.6W	PHILIPS	2322 156 11182	03.226
R353	RESISTOR MF	6k34 OHM 1% 0.6W	PHILIPS	2322 156 16342	03.228
R354	RESISTOR MF	4k7 OHM 5% 0.4W	PHILIPS	2322 181 53472	01.216
R355	RESISTOR MF	22k OHM 5% 0.4W S	BEYSCHLAG	MUB 0207-50-5%-22k	01.733
R356	RESISTOR MF	15k OHM 5% 0.4W S	BEYSCHLAG	MUB 0207-50-5%-15k	01.729
R357	RESISTOR MF	10 OHM 5% 0.4W	PHILIPS	2322 181 53109	01.150
T301	TRANSISTOR	BF 506	SIEMENS	BF506-E6325	28.202
T302	TRANSISTOR	BF 506	SIEMENS	BF506-E6325	28.202
T303	TRANSISTOR	BF 506	SIEMENS	BF506-E6325	28.202
T304	TRANSISTOR RF	BF199	MOTOROLA	BF199ZL1	28.178
T305	TRANSISTOR RF SWITCH	2N2369A	MOTOROLA	2N2369A	28.315
T306	TRANSISTOR RF SWITCH	2N2369A	MOTOROLA	2N2369A	28.315
T307	TRANSISTOR	BF 506	SIEMENS	BF506-E6325	28.202
T308	TRANSISTOR	BF 506	SIEMENS	BF506-E6325	28.202
T309	TRANSISTOR	J310	SILICONIX	J310	29.725
T310	TRANSISTOR RF	LOW POWER PNP BF979/BF479	TELEFUNKEN AG	BF979	28.250
T311	TRANSISTOR JFET	TIS88A3 TO-92	MOTORPLA	TM 00 044-3	29.737
T312	TRANSISTOR AF	BC558B	ITT/MOT	BC558B	28.100
T313	TRANSISTOR	BC549C	PHILIPS*	BC549C-126	28.082
T314	TRANSISTOR	BC549C	PHILIPS*	BC549C-126	28.082
X3O1	CRYSTAL	21.0 MHz NC-25B	DANTRONIC*	21MHz NC25B	39.838

TX-POWER AMPLIFIER MODULE 400 & 500 ECI A/S 5-0-23973B 600013

POSITION	DESCRIPTION		MANUFACTOR	TYPE	PART NO.
C401	CAPACITOR CERAMIC	18pF 5% NPO 500VDC	KCK	RT-HM60 SK CH 180 J	15.060
C402	CAPACITOR CERAMIC	33pF 5% NPO 400VDC	FERROPERM	33pF +-5% 9/0112.9-400V	15.608
C403	CAPACITOR CERAMIC	33pF 5% NPO 400VDC	FERROPERM	33pF +-5% 9/0112.9-400V	15.608
C404	CAPACITOR CERAMIC	18pF 5% NPO 500VDC	KCK	RT-HM60 SK CH 180 J	15.060
C405	CAPACITOR CERAMIC	470pF 10% 500VDC	KCK	RT-HM60 SK YB 471 K	16.095
C406	CAPACITOR CERAMIC	470pF 10% 500VDC	KCK	RT-HM60 SK YB 471 K	16.095
C407	CAPACITOR TRIMMING	5-60pF PTFE •9	DAU	109.4901.060	17.210
C408	CAPACITOR TRIMMING	3.5-38pF PTFE	DAU	109.3901.038	17.120
C409	CAPACITOR MULTI LAYER	22pF 10% HQ 100V	TEKELEC	101 S41 L 220K T	16.271
C410	CAPACITOR MKT	470nF 10% 100V	SIEMENS	B32511-D1474-K000	11.388
C411	CAPACITOR MULTI LAYER	68pF 10% HQ 100V	TEKELEC	101 S41 L 680K T	16.273
C412	CAPACITOR MULTI LAYER	68pF 10% HQ 100V	TEKELEC	101 S41 L 680K T	16.273
C413	CAPACITOR TRIMMING	3.9-27pF PTFE	DAU	107.3901.027	17.110
C414	CAPACITOR MKT	33nF 20% 63V	SIEMENS	B32529-B333-K-289	11.298
C415	CAPACITOR CERAM. SMD 1210	33pF 10% P90 100VDC	TEKELEC	101 S41 L 330K T	16.272
C417	CAPACITOR ELECTROLYTIC	4.7uF 20% 50VDC	ERO	EKI 00 AA 147 H M5K	14.510
C418	CAPACITOR CERAM. SMD 1210	33pF 10% P90 100VDC	TEKELEC	101 S41 L 330K T	16.272
C419	CAPACITOR TRIMMING	5-60pF PTFE •9	DAU	109.4901.060	17.210
C420	CAPACITOR ELECTROLYTIC	4.7uF 20% 50VDC	ERO	EKI 00 AA 147 H M5K	14.510
C421	CAPACITOR CERAM. SMD 1210	56pF 10% P90 100VDC	FERROPERM	56pF-10%-HQ-1210-200/400V	16.285
C422	CAPACITOR MKT	33nF 20% 63V	SIEMENS	B32529-B333-K-289	11.298

POSITION	DESCRIPTION		MANUFACTOR	TYPE	PART NO.
C423	CAPACITOR TRIMMING	5-45pF PTFE	DAU	107.5901.045	17.130
C424	CAPACITOR CERAMIC	56pF 5% NPO	#KCK	HE60SJCH560J	15.111
C425	PI-FILTER 2x1n5 + 0.5uH	5ADC	FERROPERM	138.64001	16.515
C426	PI-FILTER 2x1n5 + 0.5uH	5ADC	FERROPERM	138.64001	16.515
C427	PI-FILTER 2x1n5 + 0.5uH	5ADC	FERROPERM	138.64001	16.515
C428	CAPACITOR CERAM. SMD 1210	33pF 10% P90 100VDC	TEKELEC	101 S41 L 330K T	16.272
C429	CAPACITOR MULTI LAYER	82pF 10% HQ 100V	TEKELEC	101 S41 L 820K T	16.274
FP401	FERRITE BEAD	•3,7x•1.2x3.5mm GRADE 3B	PHILIPS	4322 020 34400	35.180
FP402	FERRITE BEAD	•3,7x•1.2x3.5mm GRADE 3B	PHILIPS	4322 020 34400	35.180
FP403	FERRITE BEAD	•3,7x•1.2x3.5mm GRADE 3B	PHILIPS	4322 020 34400	35.180
L401	COIL	TL367	ECI A/S	6-0-23639	400367
L402	COIL	TL367	ECI A/S	6-0-23639	400367
L403	COIL	TL367	ECI A/S	6-0-23639	400367
L404	COIL PRINTED			5-0-23973B	51.784
L405	COIL PRINTED			5-0-23973B	51.784
L406	COIL	TL067	ECI A/S	6-0-20854A	400067
L407	CHOKE FIXED	150nH 10%	SIEMENS	B78108-T3151-K	20.101
L409	CHOKE FIXED	150nH 10%	SIEMENS	B78108-T3151-K	20.101
L410	COIL	TL067	ECI A/S	6-0-20854A	400067
L411	CHOKE FIXED	150nH 10%	SIEMENS	B78108-T3151-K	20.101
L412	COIL	TL067	ECI A/S	6-0-20854A	400067
L413	COIL PRINTED			5-0-23973B	51.784
L414	CHOKE FIXED	150nH 10%	SIEMENS	B78108-T3151-K	20.101
L415	CHOKE FIXED	150nH 10%	SIEMENS	B78108-T3151-K	20.101
L416	COIL	TL366	ECI A/S	6-0-23638	400366
L417	COIL PRINTED			5-0-23973B	51.784
L419	CHOKE FIXED	330nH 10%	SIEMENS	B78108-T3331-K	20.107
L420	COIL PRINTED			5-0-23973B	51.784
L421	COIL PRINTED			5-0-23973B	51.784
R401	RESISTOR MF	22 OHM 5% 0.4W	PHILIPS	2322 181 53229	01.158
R402	RESISTOR MF	2k2 OHM 5% 0.4W	PHILIPS	2322 181 53222	01.208
R403	RESISTOR MF	68 OHM 5% 0.4W	PHILIPS	2322 181 53689	01.170
R404	RESISTOR MF	22 OHM 5% 0.4W	PHILIPS	2322 181 53229	01.158
R405	RESISTOR MF	180 OHM 5% 0.4W	PHILIPS	2322 181 53181	01.181
R406	RESISTOR MF	82 OHM 5% 0.4W	PHILIPS	2322 181 53829	01.172
T401	TRANSISTOR	MRF240	MOTOROLA	MRF 240	29.252
T402	TRANSISTOR	MRF237	MOTOROLA	MRF237	29.249
T403	TRANSISTOR RF	2N4427	MOTOROLA	2N4427	28.330
C501	CAPACITOR CERAMIC	470pF 10% 500VDC	KCK	RT-HM60 SK YB 471 K	16.095
C502	CAPACITOR CERAMIC	470pF 10% 500VDC	KCK	RT-HM60 SK YB 471 K	16.095
D501	DIODE GENERAL PURPOSE	BAV21 200V/0.25A	PHILIPS	BAV21	25.340
RE501	RELAY DPDT	12VDC 2A	SDS	NF2-EB-12V	21.193

INTERFACE UNIT MODULE 6/600 ECI A/S 5-0-27746D/4-0-27746D 627746

POSITION	DESCRIPTION		MANUFACTOR	TYPE	PART NO.
C1-6	CAPACITOR MKT	100nF 10% 63VDC	PHILIPS	2222 370 75104 (78104)	11.136
C2-6	CAPACITOR MKT	330nF 5% 63VDC	PHILIPS	2222 370 79334	11.184
C3-6	CAPACITOR MKT	330nF 5% 63VDC	PHILIPS	2222 370 79334	11.184
C4-6	CAPACITOR CERAMIC	470pF 10% 500VDC	KCK	RT-HM60 SK YB 471 K	16.095
C5-6	CAPACITOR CERAMIC	10nF -20/+80% CL2 50VDC	KCK	RT-HE70 SK YF 103 Z	15.170
C6-6	CAPACITOR CERAMIC	10nF -20/+80% CL2 50VDC	KCK	RT-HE70 SK YF 103 Z	15.170
C7-6	CAPACITOR ELECTROLYTIC	1000uF 20% 35VDC	SAMHWA ELEC.	SV-1000uF-35WV	14.655
C8-6	CAPACITOR MKT	100nF 10% 63VDC	PHILIPS	2222 370 75104 (78104)	11.136
C9-6	CAPACITOR MKT	100nF 10% 63VDC	PHILIPS	2222 370 75104 (78104)	11.136
C10-6	CAPACITOR MKT	220nF 5% 63VDC	PHILIPS	2222 370 79224	11.182
C11-6	CAPACITOR ELECTROLYTIC	4.7uF 20% 50VDC	ERO	EKI 00 AA 147 H M5K	14.510
C12-6	CAPACITOR MKT	100nF 10% 63VDC	PHILIPS	2222 370 75104 (78104)	11.136
C13-6	CAPACITOR ELECTROLYTIC	100uF -10/+50% 25VDC	ERO	EKM 00 CC 310 E G5	14.610
C14-6	CAPACITOR ELECTROLYTIC	1uF 20% 50VDC	ERO	EKI 00 AA 110 H M5K	14.506
C15-6	CAPACITOR MKT	470nF 5% 63VDC	ERO	MKT 1826-447/06 4-G	11.187
C16-6	CAPACITOR MKT	470nF 5% 63VDC	ERO	MKT 1826-447/06 4-G	11.187
C17-6	CAPACITOR MKT	22nF 5% 100VDC	PHILIPS	2222 370 89223	11.169
C18-6	CAPACITOR ELECTROLYTIC	4.7uF 20% 50VDC	ERO	EKI 00 AA 147 H M5K	14.510
C19-6	CAPACITOR ELECTROLYTIC	10uF 20% 35VDC	ERO	EKI 00 AA 210 F M5K	14.512
C20-6	CAPACITOR MKT	10nF 20% 100VDC	PHILIPS	2222 370 38103	11.168
C21-6	CAPACITOR POLYSTYRENE	1.3nF 1% 160V	#PHILIPS	2222 429 81302	10.279
C22-6	CAPACITOR ELECTROLYTIC	100uF 20% 10VDC	ERO	EKI 00 BB 310 C M0E	14.607
C23-6	CAPACITOR ELECTROLYTIC	100uF -10/+50% 25VDC	ERO	EKM 00 CC 310 E G5	14.610
C24-6	CAPACITOR POLYSTYRENE	4n70F 1% 160VDC	PHILIPS	2222 429 84702	10.292

POSITION	DESCRIPTION		MANUFACTOR	TYPE	PART NO.
C25-6	CAPACITOR MKT	220nF 5% 63VDC	PHILIPS	2222 370 79224	11.182
C26-6	CAPACITOR POLYSTYRENE	15nF 1% 160V	#PHILIPS	2222 429 81503	10.304
C27-6	CAPACITOR ELECTROLYTIC	100uF -10/+50% 25VDC	ERO	EKM 00 CC 310 E G5	14.610
C28-6	CAPACITOR ELECTROLYTIC	10uF 20% 35VDC	ERO	EKI 00 AA 210 F M5K	14.512
C29-6	CAPACITOR POLYSTYRENE	8,2nF 1% 160V	#PHILIPS	2222 429 88202	10.298
C30-6	CAPACITOR POLYSTYRENE	8,2nF 1% 160V	#PHILIPS	2222 429 88202	10.298
C31-6	CAPACITOR POLYSTYRENE	15nF 1% 160V	#PHILIPS	2222 429 81503	10.304
C32-6	CAPACITOR MKT	100nF 10% 63VDC	PHILIPS	2222 370 75104 (78104)	11.136
C33-6	CAPACITOR MKT	100nF 10% 63VDC	PHILIPS	2222 370 75104 (78104)	11.136
C34-6	CAPACITOR POLYSTYRENE	1n00F 1% 250VDC	PHILIPS	2222 430 81002	10.350
C35-6	CAPACITOR POLYSTYRENE	220pF 1% 630VDC	PHILIPS	2222 431 82201	10.409
C36-6	CAPACITOR POLYSTYRENE	1n00F 1% 250VDC	PHILIPS	2222 430 81002	10.350
C37-6	CAPACITOR MKT	22nF 5% 100VDC	PHILIPS	2222 370 89223	11.169
C38-6	CAPACITOR POLYSTYRENE	3.3nF 1% 160V	#PHILIPS	2222 429 83302	10.288
C39-6	CAPACITOR MKT	22nF 5% 100VDC	PHILIPS	2222 370 89223	11.169
C40-6	CAPACITOR MKT	22nF 5% 100VDC	PHILIPS	2222 370 89223	11.169
C41-6	CAPACITOR MKT	220nF 5% 63VDC	PHILIPS	2222 370 79224	11.182
C42-6	CAPACITOR MKT	220nF 5% 63VDC	PHILIPS	2222 370 79224	11.182
C43-6	CAPACITOR MKT	470nF 5% 63VDC	ERO	MKT 1826-447/06 4-G	11.187
C44-6	CAPACITOR MKT	220nF 5% 63VDC	PHILIPS	2222 370 79224	11.182
C45-6	CAPACITOR MKT	220nF 5% 63VDC	PHILIPS	2222 370 79224	11.182
C46-6	CAPACITOR CERAMIC	4n7F 20% CL2 50VDC	KCK	RT-HE80-SK YD 472 M	15.165
C47-6	CAPACITOR MKT	100nF 10% 63VDC	PHILIPS	2222 370 75104 (78104)	11.136
C48-6	CAPACITOR ELECTROLYTIC	33uF 20% 16VDC	ERO	EKI 00 AA 233 D M5K	14.518
C52-6	CAPACITOR MKT	220nF 5% 63VDC	PHILIPS	2222 370 79224	11.182
C53-6	CAPACITOR ELECTROLYTIC	33uF 20% 16VDC	ERO	EKI 00 AA 233 D M5K	14.518
C54-6	CAPACITOR MKT	100nF 10% 63VDC	PHILIPS	2222 370 75104 (78104)	11.136
C56-6	CAPACITOR CERAMIC	4n7F 20% CL2 50VDC	KCK	RT-HE80-SK YD 472 M	15.165
C57-6	CAPACITOR ELECTROLYTIC	220uF -20/+50% 16VDC	ERO	EKM 00 CC 322 D G5	14.640
C58-6	CAPACITOR ELECTROLYTIC	33uF 20% 16VDC	ERO	EKI 00 AA 233 D M5K	14.518
C59-6	CAPACITOR MKT	22nF 5% 100VDC	PHILIPS	2222 370 89223	11.169
C60-6	CAPACITOR ELECTROLYTIC	220uF -20/+50% 16VDC	ERO	EKM 00 CC 322 D G5	14.640
C61-6	CAPACITOR CERAMIC	220pF 10% 500VDC CL2	KCK	RT-HM60-SK YB 221 K	16.090
C62-6	CAPACITOR MKT	100nF 10% 63VDC	PHILIPS	2222 370 75104 (78104)	11.136
C63-6	CAPACITOR ELECTROLYTIC	100uF -10/+50% 25VDC	ERO	EKM 00 CC 310 E G5	14.610
C64-6	CAPACITOR ELECTROLYTIC	220uF -10/+50% 40VDC	ERO	EKM 05 DE 322 G 05	14.648
C65-6	CAPACITOR MKT	100nF 10% 63VDC	PHILIPS	2222 370 75104 (78104)	11.136
C66-6	CAPACITOR CERAMIC	10nF -20/+80% CL2 50VDC	KCK	RT-HE70 SK YF 103 Z	15.170
C67-6	CAPACITOR CERAMIC	10nF -20/+80% CL2 50VDC	KCK	RT-HE70 SK YF 103 Z	15.170
C68-6	CAPACITOR CERAMIC	10nF -20/+80% CL2 50VDC	KCK	RT-HE70 SK YF 103 Z	15.170
C69-6	CAPACITOR CERAMIC	10nF -20/+80% CL2 50VDC	KCK	RT-HE70 SK YF 103 Z	15.170
C70-6	CAPACITOR CERAMIC	10nF -20/+80% CL2 50VDC	KCK	RT-HE70 SK YF 103 Z	15.170
C71-6	CAPACITOR CERAMIC	4n7F 20% CL2 50VDC	KCK	RT-HE80-SK YD 472 M	15.165
C72-6	CAPACITOR CERAMIC	220pF 10% 500VDC CL2	KCK	RT-HM60-SK YB 221 K	16.090
C73-6	CAPACITOR ELECTROLYTIC	220uF -20/+50% 16VDC	ERO	EKM 00 CC 322 D G5	14.640
C74-6	CAPACITOR ELECTROLYTIC	10uF 20% 35VDC	ERO	EKI 00 AA 210 F M5K	14.512
C75-6	CAPACITOR MKT	220nF 10% 63VDC	PHILIPS	2222 370 78224	11.095
C76-6	CAPACITOR CERAMIC	4n7F 20% CL2 50VDC	KCK	RT-HE80-SK YD 472 M	15.165
C77-6	CAPACITOR MKT	470nF 5% 63VDC	ERO	MKT 1826-447/06 4-G	11.187
C78-6	CAPACITOR ELECTROLYTIC	10uF 20% 35VDC	ERO	EKI 00 AA 210 F M5K	14.512
C79-6	CAPACITOR ELECTROLYTIC	10uF 20% 35VDC	ERO	EKI 00 AA 210 F M5K	14.512
D1-6	TRANSIENT SUPPRESSOR 18V	1N6277A, PFZ18A, KE1.5KE1	MOTOROLA	1N6277ARL4	26.765
D2-6	DIODE	1N4148 HIGH SPEED	PHILIPS	1N4148-143	25.131
D3-6	DIODE	1N4148 HIGH SPEED	PHILIPS	1N4148-143	25.131
D4-6	DIODE GENERAL PURPOSE	BAV21 200V/0.25A	PHILIPS	BAV21	25.340
D7-6	DIODE HIGH SPEED	1N4448	PHILIPS	1N4448	25.147
D8-6	DIODE HIGH SPEED	1N4448	PHILIPS	1N4448	25.147
D9-6	DIODE ZENER	5.1V 5% 0.4W BZX79C5V1	MOTOROLA	BZX79C5V1	26.527
D10-6	DIODE HIGH SPEED	1N4448	PHILIPS	1N4448	25.147
D11-6	DIODE HIGH SPEED	1N4448	PHILIPS	1N4448	25.147
D12-6	DIODE HIGH SPEED	1N4448	PHILIPS	1N4448	25.147
D13-6	DIODE	BAW62 HIGH SPEED	PHILIPS	BAW62-143	25.350
D14-6	DIODE	BAW62 HIGH SPEED	PHILIPS	BAW62-143	25.350
D16-6	DIODE	1N4148 HIGH SPEED	PHILIPS	1N4148-143	25.131
D17-6	DIODE	1N4148 HIGH SPEED	PHILIPS	1N4148-143	25.131
D20-6	DIODE	1N4148 HIGH SPEED	PHILIPS	1N4148-143	25.131
F1-6	FUSE	8AF 250V •5x20mm	ELU	171 100 8AF	45.561
P1-6	PLUG MT	2 POLES	AMP	0-826375-2	78.102
P2-6	PLUG MT	11 POLES	AMP	1-826375-1	78.111
P3-6	PLUG MT	9 POLES	AMP	0-826375-9	78.109
P4-6	PLUG MT	10 POLES	AMP	1-826375-0	78.110
P5-6	PLUG MT	6 POLES	AMP	0-826375-6	78.106
P6-6	PLUG MT	7 POLE	AMP	0-826375-7	78.107
P7-6	MULTI PLUG	2x8 POLES PCB VERSION	3M	3599-6002 / 7616-6002 JL	78.249

POSITION	DESCRIPTION		MANUFACTOR	TYPE	PART NO.
P8-6	SIL SQUARE PINS	3 POLES CC=1/10"	AMP	0-826629-3 (0-826647-3)	78.323
Q1-6	TRANSISTOR	BC638	MOTOROLA*	BC638ZL1 / BC640ZL1	28.117
Q2-6	TRANSISTOR	BC638	MOTOROLA*	BC638ZL1 / BC640ZL1	28.117
Q3-6	TRANSISTOR	BC638	MOTOROLA*	BC638ZL1 / BC640ZL1	28.117
Q4-6	TRANSISTOR	BC638	MOTOROLA*	BC638ZL1 / BC640ZL1	28.117
Q5-6	TRANSISTOR AF	BC548 NPN TO-92	PHILIPS	BC548 (-A/-B/-C)126	28.070
Q6-6	TRANSISTOR AF	BC328-25 PNP TO-92	PHILIPS	BC328-25-126	28.052
Q7-6	TRANSISTOR AF	BC558B	ITT/MOT	BC558B	28.100
Q8-6	TRANSISTOR AF	BC558B	ITT/MOT	BC558B	28.100
Q9-6	TRANSISTOR AF POWER PNP	BD138	MOTOROLA	BD138	29.057
Q10-6	TRANSISTOR AF	BC548B NPN TO-92	PHILIPS	BC548B-126	28.076
Q11-6	TRANSISTOR AF MED.POWER	BD234-BD236-BD238	MOTOROLA	BD238 (BD234,BD236)	29.070
Q12-6	TRANSISTOR AF	BC338-25 NPN TO-92	PHILIPS	BC338-25-126	28.058
Q13-6	TRANSISTOR AF	BC548B NPN TO-92	PHILIPS	BC548B-126	28.076
Q14-6	TRANSISTOR	BC547A	MOTOROLA*	BC547AZL1	28.065
Q15-6	TRANSISTOR	BC558 PNP TO-92	PHILIPS	BC558-126	28.097
Q16-6	TRANSISTOR AF	BC338-25 NPN TO-92	PHILIPS	BC338-25-126	28.058
Q18-6	TRANSISTOR	BC547A	MOTOROLA*	BC547AZL1	28.065
Q19-6	TRANSISTOR	BC556A	PHILIPS*	BC556A-126	28.084
R1-6	RESISTOR MF	10k OHM 5% 0.4W	PHILIPS	2322 181 53103	01.225
R3-6	RESISTOR MF	1k0 OHM 5% 0.4W	PHILIPS	2322 181 53102	01.200
R4-6	RESISTOR MF	1k0 OHM 5% 0.4W	PHILIPS	2322 181 53102	01.200
R5-6	RESISTOR MF	2k2 OHM 5% 0.4W	PHILIPS	2322 181 53222	01.208
R6-6	RESISTOR MF	33k OHM 5% 0.4W	PHILIPS	2322 181 53333	01.237
R7-6	RESISTOR MF	10k OHM 5% 0.4W	PHILIPS	2322 181 53103	01.225
R8-6	RESISTOR MF	10k OHM 5% 0.4W	PHILIPS	2322 181 53103	01.225
R9-6	RESISTOR MF	1k0 OHM 5% 0.4W	PHILIPS	2322 181 53102	01.200
R10-6	RESISTOR MF	10k OHM 5% 0.4W	PHILIPS	2322 181 53103	01.225
R11-6	RESISTOR MF	12k OHM 5% 0.4W	PHILIPS	2322 181 53123	01.227
R12-6	RESISTOR MF	180k OHM 5% 0.4W	PHILIPS	2322 181 53184	01.256
R13-6	RESISTOR MF	220k OHM 5% 0.4W	PHILIPS	2322 181 53224	01.258
R14-6	RESISTOR MF	470k OHM 5% 0.4W	PHILIPS	2322 181 53474	01.266
R15-6	RESISTOR MF	10k OHM 5% 0.4W	PHILIPS	2322 181 53103	01.225
R16-6	PRESET CERMET	10k OHM 10% 0.5W	BOURNS	3386P-Y91-103	07.889
R17-6	RESISTOR MF	100k OHM 5% 0.4W	PHILIPS	2322 181 53104	01.250
R18-6	RESISTOR MF	470k OHM 5% 0.4W	PHILIPS	2322 181 53474	01.266
R19-6	RESISTOR MF	3k3 OHM 5% 0.4W	PHILIPS	2322 181 53332	01.212
R20-6	RESISTOR MF	3k3 OHM 5% 0.4W	PHILIPS	2322 181 53332	01.212
R21-6	RESISTOR MF	10k OHM 5% 0.4W	PHILIPS	2322 181 53103	01.225
R22-6	RESISTOR MF	18k OHM 5% 0.4W	PHILIPS	2322 181 53183	01.231
R23-6	PRESET CERMET	100k OHM 10% 0.5W	BOURNS	3386P-Y91-104	07.893
R24-6	RESISTOR MF	2k2 OHM 5% 0.4W	PHILIPS	2322 181 53222	01.208
R25-6	RESISTOR MF	220k OHM 5% 0.4W	PHILIPS	2322 181 53224	01.258
R26-6	RESISTOR MF	220k OHM 5% 0.4W	PHILIPS	2322 181 53224	01.258
R27-6	RESISTOR MF	12k OHM 5% 0.4W	PHILIPS	2322 181 53123	01.227
R28-6	RESISTOR MF	1k0 OHM 5% 0.4W	PHILIPS	2322 181 53102	01.200
R29-6	PRESET CERMET	10k OHM 10% 0.5W	BOURNS	3386P-Y91-103	07.889
R30-6	RESISTOR MF	10k OHM 5% 0.4W	PHILIPS	2322 181 53103	01.225
R31-6	RESISTOR MF	10k OHM 5% 0.4W	PHILIPS	2322 181 53103	01.225
R32-6	RESISTOR MF	1k2 OHM 5% 0.4W	PHILIPS	2322 181 53122	01.202
R33-6	RESISTOR MF	2k2 OHM 5% 0.4W	PHILIPS	2322 181 53222	01.208
R34-6	RESISTOR MF	82k OHM 5% 0.4W	PHILIPS	2322 181 53823	01.247
R35-6	RESISTOR MF	4k7 OHM 5% 0.4W	PHILIPS	2322 181 53472	01.216
R36-6	RESISTOR MF	470 OHM 5% 0.4W	PHILIPS	2322 181 53471	01.191
R37-6	RESISTOR MF	4k7 OHM 5% 0.4W	PHILIPS	2322 181 53472	01.216
R38-6	RESISTOR MF	10k OHM 5% 0.4W	PHILIPS	2322 181 53103	01.225
R39-6	RESISTOR MF	680k OHM 5% 0.4W	PHILIPS	2322 181 53684	01.270
R40-6	RESISTOR MF	1R00 OHM 1% 0.6W	PHILIPS	2322 156 11008	03.125
R41-6	RESISTOR MF	1k0 OHM 5% 0.4W	PHILIPS	2322 181 53102	01.200
R42-6	RESISTOR MF	100 OHM 5% 0.4W	PHILIPS	2322 181 53101	01.175
R43-6	RESISTOR MF	82k OHM 5% 0.4W	PHILIPS	2322 181 53823	01.247
R44-6	RESISTOR MF	2k2 OHM 5% 0.4W	PHILIPS	2322 181 53222	01.208
R45-6	RESISTOR MF	3k3 OHM 5% 0.4W	PHILIPS	2322 181 53332	01.212
R46-6	RESISTOR MF	2k2 OHM 5% 0.4W	PHILIPS	2322 181 53222	01.208
R47-6	RESISTOR MF	220 OHM 5% 0.4W	PHILIPS	2322 181 53221	01.183
R48-6	RESISTOR MF	1k0 OHM 5% 0.4W	PHILIPS	2322 181 53102	01.200
R49-6	RESISTOR MF	68 OHM 5% 0.4W	PHILIPS	2322 181 53689	01.170
R50-6	RESISTOR MF	47k OHM 5% 0.4W	PHILIPS	2322 181 53473	01.241
R51-6	RESISTOR MF	68k OHM 5% 0.4W	PHILIPS	2322 181 53683	01.245
R52-6	RESISTOR MF	1M2 OHM 5% 0.4W	PHILIPS	2322 181 53125	01.277
R53-6	RESISTOR MF	680 OHM 5% 0.4W	PHILIPS	2322 181 53681	01.195
R54-6	RESISTOR MF	330 OHM 5% 0.4W	PHILIPS	2322 181 53331	01.187
R55-6	RESISTOR MF	100 OHM 5% 0.4W	PHILIPS	2322 181 53101	01.175
R56-6	RESISTOR MF	470 OHM 5% 0.4W	PHILIPS	2322 181 53471	01.191

POSITION	DESCRIPTION		MANUFACTOR	TYPE	PART NO.
R57-6	RESISTOR	15.8 KOHM 1% 0.4W	*PHILIPS	2322 156 11583	03.430
R58-6	RESISTOR MF	14k0 OHM 1% 0.6W	PHILIPS	2322 156 11403	03.432
R59-6	RESISTOR	15.8 KOHM 1% 0.4W	*PHILIPS	2322 156 11583	03.430
R60-6	RESISTOR MF	178 OHM 1% 0.6W	PHILIPS	2322 156 11781	03.380
R61-6	PRESET CERMET	1k0 OHM 10% 0.5W	BOURNS	3386P-Y91-102	07.886
R62-6	RESISTOR MF	5k1 OHM 5% 0.4W	PHILIPS	2322 181 53512	01.217
R63-6	PRESET CERMET	2k0 OHM 5% 0.5W	BOURNS	3386P-Y91-202	07.887
R64-6	RESISTOR MF	1k2 OHM 5% 0.4W	PHILIPS	2322 181 53122	01.202
R65-6	PRESET CERMET	500 OHM 10% 0.5W	BOURNS	3386P-Y91-501	07.885
R66-6	RESISTOR MF	1k2 OHM 5% 0.4W	PHILIPS	2322 181 53122	01.202
R67-6	RESISTOR MF	560 OHM 5% 0.4W	PHILIPS	2322 181 53561	01.193
R68-6	PRESET CERMET	1k0 OHM 10% 0.5W	BOURNS	3386P-Y91-102	07.886
R69-6	RESISTOR MF	820 OHM 5% 0.4W	PHILIPS	2322 181 53821	01.197
R70-6	RESISTOR MF	392 OHM 1% 0.6W	PHILIPS	2322 156 13921	03.389
R71-6	RESISTOR	15.8 KOHM 1% 0.4W	*PHILIPS	2322 156 11583	03.430
R72-6	RESISTOR MF	5k6 OHM 5% 0.4W	PHILIPS	2322 181 53562	01.218
R73-6	RESISTOR MF	18k OHM 5% 0.4W	PHILIPS	2322 181 53183	01.231
R74-6	PRESET CERMET	10k OHM 10% 0.5W	BOURNS	3386P-Y91-103	07.889
R75-6	RESISTOR MF	82k OHM 5% 0.4W	PHILIPS	2322 181 53823	01.247
R76-6	RESISTOR MF	3k9 OHM 5% 0.4W	PHILIPS	2322 181 53392	01.214
R77-6	RESISTOR MF	220k OHM 5% 0.4W	PHILIPS	2322 181 53224	01.258
R78-6	RESISTOR MF	47k OHM 5% 0.4W	PHILIPS	2322 181 53473	01.241
R79-6	RESISTOR MF	47k OHM 5% 0.4W	PHILIPS	2322 181 53473	01.241
R80-6	RESISTOR MF	10k OHM 5% 0.4W	PHILIPS	2322 181 53103	01.225
R81-6	RESISTOR MF	180k OHM 5% 0.4W	PHILIPS	2322 181 53184	01.256
R82-6	PRESET CERMET	5k0 OHM 10% 0.5W	BOURNS	3386P-Y91-502	07.888
R83-6	RESISTOR MF	22k OHM 5% 0.4W	PHILIPS	2322 181 53223	01.233
R84-6	RESISTOR MF	680 OHM 5% 0.4W	PHILIPS	2322 181 53681	01.195
R85-6	RESISTOR MF	22k OHM 5% 0.4W	PHILIPS	2322 181 53223	01.233
R86-6	RESISTOR MF	100k OHM 5% 0.4W	PHILIPS	2322 181 53104	01.250
R87-6	RESISTOR MF	47k OHM 5% 0.4W	PHILIPS	2322 181 53473	01.241
R88-6	RESISTOR MF	47k OHM 5% 0.4W	PHILIPS	2322 181 53473	01.241
R89-6	RESISTOR MF	330k OHM 5% 0.4W	PHILIPS	2322 181 53334	01.262
R90-6	RESISTOR MF	10k OHM 5% 0.4W	PHILIPS	2322 181 53103	01.225
R92-6	RESISTOR MF	4k7 OHM 5% 0.4W	PHILIPS	2322 181 53472	01.216
R93-6	RESISTOR MF	100k OHM 5% 0.4W	PHILIPS	2322 181 53104	01.250
R94-6	RESISTOR MF	12k OHM 5% 0.4W	PHILIPS	2322 181 53123	01.227
R95-6	RESISTOR MF	39k OHM 5% 0.4W	PHILIPS	2322 181 53393	01.239
R96-6	RESISTOR MF	1k5 OHM 5% 0.4W	PHILIPS	2322 181 53152	01.204
R97-6	RESISTOR MF	18k OHM 5% 0.4W	PHILIPS	2322 181 53183	01.231
R99-6	RESISTOR MF	10k OHM 5% 0.4W	PHILIPS	2322 181 53103	01.225
R101-6	RESISTOR MF	120k OHM 5% 0.4W	PHILIPS	2322 181 53124	01.252
R102-6	RESISTOR MF	390k OHM 5% 0.4W	PHILIPS	2322 181 53394	01.264
R103-6	RESISTOR MF	10k OHM 5% 0.4W	PHILIPS	2322 181 53103	01.225
R104-6	RESISTOR	ZERO OHM 2AMPS	BEYSCHLAG	MRA 0204-0R0	02.395
R105-6	RESISTOR MF	39k OHM 5% 0.4W	PHILIPS	2322 181 53393	01.239
R106-6	RESISTOR MF	33k OHM 5% 0.4W	PHILIPS	2322 181 53333	01.237
R107-6	RESISTOR MF	56k OHM 5% 0.4W	PHILIPS	2322 181 53563	01.243
R108-6	RESISTOR MF	18k OHM 5% 0.4W	PHILIPS	2322 181 53183	01.231
R112-6	RESISTOR MF	220 OHM 5% 0.4W	PHILIPS	2322 181 53221	01.183
R113-6	PRESET CERMET	5k0 OHM 10% 0.5W	BOURNS	3386P-Y91-502	07.888
R114-6	RESISTOR MF	10k OHM 5% 0.4W	PHILIPS	2322 181 53103	01.225
R119-6	RESISTOR MF	33k OHM 5% 0.4W	PHILIPS	2322 181 53333	01.237
R120-6	RESISTOR MF	15k OHM 5% 0.4W	PHILIPS	2322 181 53153	01.229
R121-6	RESISTOR MF	100k OHM 5% 0.4W	PHILIPS	2322 181 53104	01.250
R122-6	RESISTOR MF	10k OHM 5% 0.4W	PHILIPS	2322 181 53103	01.225
R123-6	RESISTOR MF	10k OHM 5% 0.4W	PHILIPS	2322 181 53103	01.225
R124-6	RESISTOR MF	178 OHM 1% 0.6W	PHILIPS	2322 156 11781	03.380
R125-6	RESISTOR MF	3k3 OHM 5% 0.4W	PHILIPS	2322 181 53332	01.212
R126-6	RESISTOR MF	2k2 OHM 5% 0.4W	PHILIPS	2322 181 53222	01.208
R127-6	RESISTOR MF	2k2 OHM 5% 0.4W	PHILIPS	2322 181 53222	01.208
R128-6	RESISTOR MF	178 OHM 1% 0.6W	PHILIPS	2322 156 11781	03.380
R129-6	RESISTOR MF	6R8 OHM 5% 0.4W	PHILIPS	2322 181 53688	01.145
R130-6	RESISTOR MF	220 OHM 5% 0.4W	PHILIPS	2322 181 53221	01.183
R131-6	RESISTOR	63.4 KOHM 1% 0.4W	*PHILIPS	2322 156 16343	03.444
R132-6	RESISTOR MF	31k6 OHM 1% 0.6W	PHILIPS	2322 156 13163	03.436
R133-6	RESISTOR	15.8 KOHM 1% 0.4W	*PHILIPS	2322 156 11583	03.430
R134-6	RESISTOR	8.06 KOHM 1% 0.4W	*PHILIPS	2322 156 18062	03.422
R135-6	RESISTOR	63.4 KOHM 1% 0.4W	*PHILIPS	2322 156 16343	03.444
R136-6	RESISTOR MF	31k6 OHM 1% 0.6W	PHILIPS	2322 156 13163	03.436
R137-6	RESISTOR	15.8 KOHM 1% 0.4W	*PHILIPS	2322 156 11583	03.430
R138-6	RESISTOR	8.06 KOHM 1% 0.4W	*PHILIPS	2322 156 18062	03.422
R139-6	RESISTOR MF	3k01 OHM 1% 0.6W	PHILIPS	2322 156 13012	03.411
R140-6	RESISTOR MF	1 OHM 5% 0.4W	PHILIPS	2322 181 53108	01.125

POSITION	DESCRIPTION		MANUFACTOR	TYPE	PART NO.
R141-6	RESISTOR MF	10k OHM 5% 0.4W	PHILIPS	2322 181 53103	01.225
R143-6	RESISTOR MF	1k0 OHM 5% 0.4W	PHILIPS	2322 181 53102	01.200
R144-6	RESISTOR MF	1k0 OHM 5% 0.4W	PHILIPS	2322 181 53102	01.200
R145-6	RESISTOR MF	3k3 OHM 5% 0.4W	PHILIPS	2322 181 53332	01.212
R146-6	RESISTOR MF	10k OHM 5% 0.4W	PHILIPS	2322 181 53103	01.225
R147-6	RESISTOR MF	10k OHM 5% 0.4W	PHILIPS	2322 181 53103	01.225
R148-6	RESISTOR MF	10k OHM 5% 0.4W	PHILIPS	2322 181 53103	01.225
R150-6	RESISTOR MF	56k OHM 5% 0.4W	PHILIPS	2322 181 53563	01.243
R151-6	RESISTOR MF	10k OHM 5% 0.4W	PHILIPS	2322 181 53103	01.225
R152-6	RESISTOR MF	10k OHM 5% 0.4W	PHILIPS	2322 181 53103	01.225
R153-6	RESISTOR MF	10k OHM 5% 0.4W	PHILIPS	2322 181 53103	01.225
R154-6	RESISTOR MF	10k OHM 5% 0.4W	PHILIPS	2322 181 53103	01.225
R155-6	RESISTOR MF	220k OHM 5% 0.4W	PHILIPS	2322 181 53224	01.258
R156-6	RESISTOR	11 KOHM 1% 0.4W	*PHILIPS	2322 156 11103	03.458
R157-6	RESISTOR MF	4k7 OHM 5% 0.4W	PHILIPS	2322 181 53472	01.216
R158-6	RESISTOR MF	820 OHM 5% 0.4W	PHILIPS	2322 181 53821	01.197
R159-6	RESISTOR MF	68 OHM 5% 0.4W	PHILIPS	2322 181 53689	01.170
R160-6	RESISTOR MF	150 OHM 5% 0.4W	PHILIPS	2322 181 53151	01.179
R161-6	RESISTOR MF	8k2 OHM 5% 0.4W	PHILIPS	2322 181 53822	01.222
R162-6	PRESET CERMET	500 OHM 10% 0.5W	BOURNS	3386P-Y91-501	07.885
RA1-6	RESISTOR ARRAY	8x10k OHM 5% 1/8W	PANASONIC	EXB-F9E-103 J	08.630
RA2-6	RESISTOR ARRAY	4x4k7 OHM 5% 1/8W	BOURNS	4608X-102-472	08.625
RE3-6	RELAY	E3206H	EICHHOFF	BV-55-280R	21.026
U1-6	VOLTAGE REGULATOR FIXED	5V/1A, MC7805, LM340T-5.0	MOTOROLA	MC7805CT (MC7805BT)	31.250
U2-6	INTEGRATED CIRCUIT	TDA2002V	SGS*	TDA2003	31.480
U3-6	DUAL OP AMP	LM358N	MOTOTOLA	LM 358N	31.100
U4-6	8-STAGE SHIFT/STORE REG.	MC14094, CD4094,	MOTOROLA	MC14094BCP	33.305
U5-6	DUAL OPERATIONAL AMP.	MC1458/LM1458	MOTOROLA	MC1458CP1	31.215
U6-6	TRANSISTOR ARRAY	3046	NATIONAL	LM3046N	31.025
U7-6	QUAD VOLTAGE COMPERATOR	LM339	NATIONAL	LM339N	31.075
U8-6	EEPROM	2k BIT SERIAL	NATIONAL	NMC93C56N	32.710
U11-6	POW.DARLINGTON DRIVER x 7	ULN2003/MC1413	MOTOROLA	MC1413P	31.077
U12-6	DUAL TYPE D FLIP-FLOP	MC14013BCP	MOTOROLA*	MC14013BCP	33.056
U13-6	INTEGRATED CIRCUIT	QUAD ANALOG SWITCH	MOTOROLA	MC14066BCP	33.233
U14-6	INTEGRATED CIRCUIT	LF347N	#NATIOPNAL	LF347N	31.530
U15-6	DUAL DIFF.COMPARATOR	LM393	TEXAS	LM393P	31.105
U16-6	HEX INVERTERS	74HC04	TEXAS	SN74HC04N	34.520
U17-6	QUAD OP.AMP.	324	NAT/SGS	LM324N	31.065
U18-6	INTEGRATED CIRCUIT	MC14569BCP	* MOTOROLA	MC14569BCP	33.449
U19-6	PROG. PROCESSOR U19 FOR	627746,INTERFACE,RT2047/D	S.P.RADIO A/S	C1112B - 2F60	728228

KEYBOARD UNIT	MODULE 7/700	ECI A/S	5-0-27747C/4-0-27747B	627747

POSITION	DESCRIPTION		MANUFACTOR	TYPE	PART NO.
C1-7	CAPACITOR CERAMIC	10nF -20/+80% CL2 50VDC	KCK	RT-HE70 SK YF 103 Z	15.170
C2-7	CAPACITOR CERAMIC	10nF -20/+80% CL2 50VDC	KCK	RT-HE70 SK YF 103 Z	15.170
C3-7	CAPACITOR CERAMIC	10nF -20/+80% CL2 50VDC	KCK	RT-HE70 SK YF 103 Z	15.170
C4-7	CAPACITOR CERAMIC	10nF -20/+80% CL2 50VDC	KCK	RT-HE70 SK YF 103 Z	15.170
C5-7	CAPACITOR CERAMIC	10nF -20/+80% CL2 50VDC	KCK	RT-HE70 SK YF 103 Z	15.170
C6-7	CAPACITOR MKT	220nF 20% 63VDC	ERO	MKT 1826-422/06 6-G	11.183
C7-7	CAPACITOR CERAMIC	27pF 5% N150 50VDC	KCK	RT-HE50-SK PH 270 J	15.076
C8-7	CAPACITOR CERAMIC	27pF 5% N150 50VDC	KCK	RT-HE50-SK PH 270 J	15.076
C9-7	CAPACITOR MKT	220nF 20% 63VDC	ERO	MKT 1826-422/06 6-G	11.183
C11-7	CAPACITOR CERAMIC	1n0F 10% CL2 500VDC	KCK	RT-HM60 SK YB 102 K	15.160
C12-7	CAPACITOR CERAMIC	1n0F 10% CL2 500VDC	KCK	RT-HM60 SK YB 102 K	15.160
C13-7	CAPACITOR CERAMIC	1n0F 10% CL2 500VDC	KCK	RT-HM60 SK YB 102 K	15.160
C14-7	CAPACITOR CERAMIC	1n0F 10% CL2 500VDC	KCK	RT-HM60 SK YB 102 K	15.160
C15-7	CAPACITOR CERAMIC	1n0F 10% CL2 500VDC	KCK	RT-HM60 SK YB 102 K	15.160
C16-7	CAPACITOR ELECTROLYTIC	33uF 20% 16VDC	ERO	EKI 00 AA 233 D M5K	14.518
C17-7	CAPACITOR CERAMIC	1n0F 10% CL2 500VDC	KCK	RT-HM60 SK YB 102 K	15.160
C18-7	CAPACITOR MKT	1u0F 10% 63VDC	PHILIPS	2222 370 78105	11.137
D1-7	DIODE	1N4148 HIGH SPEED	PHILIPS	1N4148-143	25.131
D2-7	DIODE LIGHT EMITTING	ORANGE 5mm	SANKEN	SEL 1913K	25.631
D3-7	DIODE LIGHT EMITTING	ORANGE 5mm	SANKEN	SEL 1913K	25.631
D4-7	DIODE LIGHT EMITTING	YELLOW 5mm	SANKEN	SEL1910D	25.630
D5-7	DIODE LIGHT EMITTING	YELLOW 5mm	SANKEN	SEL1910D	25.630
D6-7	DIODE LIGHT EMITTING	ORANGE 5mm	SANKEN	SEL 1913K	25.631
D7-7	DIODE LIGHT EMITTING	ORANGE 5mm	SANKEN	SEL 1913K	25.631
D8-7	LIQUID CRYSTAL DISPLAY	COSTUM DESIGNED RT2047	STANDISH(HAMLIN	SP TG.0-3-23886A	25.705
P1-7	MULTI PLUG	2x8 POLES PCB VERSION	3M	3599-6002 / 7616-6002 JL	78.249

POSITION	DESCRIPTION		MANUFACTOR	TYPE	PART NO.
P2-7	PLUG MT	2 POLES	AMP	0-826375-2	78.102
P3-7	PLUG RIGHT ANGEL	1/10" SIL SQ.PINS 11POLES	EURO DIP	PH3-025/057-11-Z	78.352
P4-7	SIL SQUARE PINS	2 POLES CC=1/10"	AMP	0-826629-2	78.322
Q1-7	TRANSISTOR	BC558 PNP TO-92	PHILIPS	BC558-126	28.097
Q2-7	TRANSISTOR AF	BC548B NPN TO-92	PHILIPS	BC548B-126	28.076
Q3-7	TRANSISTOR AF	BC548B NPN TO-92	PHILIPS	BC548B-126	28.076
Q4-7	TRANSISTOR AF	BC328-25 PNP TO-92	PHILIPS	BC328-25-126	28.052
Q5-7	TRANSISTOR AF	BC548B NPN TO-92	PHILIPS	BC548B-126	28.076
R1-7	RESISTOR MF	4k7 OHM 5% 0.4W	PHILIPS	2322 181 53472	01.216
R2-7	RESISTOR MF	4k7 OHM 5% 0.4W	PHILIPS	2322 181 53472	01.216
R3-7	RESISTOR MF	1k0 OHM 5% 0.4W	PHILIPS	2322 181 53102	01.200
R4-7	RESISTOR MF	1k0 OHM 5% 0.4W	PHILIPS	2322 181 53102	01.200
R5-7	RESISTOR MF	1k0 OHM 5% 0.4W	PHILIPS	2322 181 53102	01.200
R7-7	RESISTOR MF	10k OHM 5% 0.4W	PHILIPS	2322 181 53103	01.225
R8-7	RESISTOR MF	8k2 OHM 5% 0.4W	PHILIPS	2322 181 53822	01.222
R9-7	RESISTOR MF	1k5 OHM 5% 0.4W	PHILIPS	2322 181 53152	01.204
R10-7	RESISTOR MF	1k0 OHM 5% 0.4W	PHILIPS	2322 181 53102	01.200
R11-7	RESISTOR MF	68 OHM 5% 0.4W	PHILIPS	2322 181 53689	01.170
R12-7	RESISTOR MF	68 OHM 5% 0.4W	PHILIPS	2322 181 53689	01.170
R13-7	RESISTOR	22 OHM 5% 0.5W	PHILIPS	2322 156 12209	03.159
R14-7	RESISTOR MF	1k0 OHM 5% 0.4W	PHILIPS	2322 181 53102	01.200
R15-7	RESISTOR MF	47 OHM 5% 0.4W	PHILIPS	2322 181 53479	01.166
R16-7	RESISTOR MF	3k9 OHM 5% 0.4W	PHILIPS	2322 181 53392	01.214
R17-7	RESISTOR MF	220k OHM 5% 0.4W	PHILIPS	2322 181 53224	01.258
R18-7	RESISTOR MF	330 OHM 5% 0.4W	PHILIPS	2322 181 53331	01.187
R19-7	RESISTOR MF	10k OHM 5% 0.4W	PHILIPS	2322 181 53103	01.225
R20-7	RESISTOR ARRAY	10x10k OHMS 5% 1/8W	PANASONIC	EXB-F 11 E 103 J	08.618
R21-7	RESISTOR ARRAY	8x10k OHM 5% 1/8W	PANASONIC	EXB-F9E-103 J	08.630
R22-7	RESISTOR ARRAY	4x10k OHM 5% 1/8W	PANASONIC	EXBF8V103G (4X10K)	08.615
R23-7	RESISTOR MF	1M0 OHM 5% 0.4W	PHILIPS	2322 181 53105	01.275
U1-7	8-STAGE SHIFT/STORE REG.	MC14094, CD4094,	MOTOROLA	MC14094BCP	33.305
U2-7	8-STAGE SHIFT/STORE REG.	MC14094, CD4094,	MOTOROLA	MC14094BCP	33.305
U3-7	8-STAGE SHIFT/STORE REG.	MC14094, CD4094,	MOTOROLA	MC14094BCP	33.305
U4-7	8-STAGE SHIFT/STORE REG.	MC14094, CD4094,	MOTOROLA	MC14094BCP	33.305
U5-7	8-STAGE SHIFT/STORE REG.	MC14094, CD4094,	MOTOROLA	MC14094BCP	33.305
U6-7	8-STAGE SHIFT/STORE REG.	MC14094, CD4094,	MOTOROLA	MC14094BCP	33.305
U7-7	HEX INVERTERS	74HC04	TEXAS	SN74HC04N	34.520
U8-7	VOLTAGE REGULATOR FIXED	5V/1A, MC7805, LM340T-5.0	MOTOROLA	MC7805CT (MC7805BT)	31.250
U9-7	PROG. PROCESSOR U9 FOR	627747,KEYBOARD,RT2047/D	S.P.RADIO A/S	C1111A - BBED	728229
U10-7	DUAL DIFF.COMPARATOR	LM393	TEXAS	LM393P	31.105
XR1-7	CERAMIC RESONATOR 4 MHz		MURATA	CSA 4.00 MG TF01	41.510

FILTER UNIT	MODULE 9/900	ECI A/S	5-0-27749C / 4-0-27749C	627749

POSITION	DESCRIPTION		MANUFACTOR	TYPE	PART NO.
C1-9	CAPACITOR MKT	1u0F 10% 63VDC	PHILIPS	2222 370 78105	11.137
L1-9	FERRITE BEAD INDUCTOR	DOUBLE BEAD CORE	MURATA	BL02RN2-R62T2	35.300
LC1-9	EMI SUPPRESSION FILTER	Fo=70MHz	MURATA	DST310-92(91)Y5S 222M 100	18.550
LC2-9	EMI SUPPRESSION FILTER	Fo=70MHz	MURATA	DST310-92(91)Y5S 222M 100	18.550
LC3-9	EMI SUPPRESSION FILTER	Fo=70MHz	MURATA	DST310-92(91)Y5S 222M 100	18.550
LC4-9	EMI SUPPRESSION FILTER	Fo=70MHz	MURATA	DST310-92(91)Y5S 222M 100	18.550
LC5-9	EMI SUPPRESSION FILTER	Fo=70MHz	MURATA	DST310-92(91)Y5S 222M 100	18.550
LC6-9	EMI SUPPRESSION FILTER	Fo=70MHz	MURATA	DST310-92(91)Y5S 222M 100	18.550
LC7-9	EMI SUPPRESSION FILTER	Fo=70MHz	MURATA	DST310-92(91)Y5S 222M 100	18.550
LC8-9	EMI SUPPRESSION FILTER	Fo=70MHz	MURATA	DST310-92(91)Y5S 222M 100	18.550
LC9-9	EMI SUPPRESSION FILTER	Fo=70MHz	MURATA	DST310-92(91)Y5S 222M 100	18.550
LC10-9	EMI SUPPRESSION FILTER	Fo=70MHz	MURATA	DST310-92(91)Y5S 222M 100	18.550
LC11-9	EMI SUPPRESSION FILTER	Fo=70MHz	MURATA	DST310-92(91)Y5S 222M 100	18.550
LC12-9	EMI SUPPRESSION FILTER	Fo=70MHz	MURATA	DST310-92(91)Y5S 222M 100	18.550
P1-9	SOLDER LUG	PCB VERSION	VOGT AG	01015/Bz-Sn	82.005
P2-9	SOLDER LUG	PCB VERSION	VOGT AG	01015/Bz-Sn	82.005
P3-9	SOLDER LUG	PCB VERSION	VOGT AG	01015/Bz-Sn	82.005
P4-9	SOLDER LUG	PCB VERSION	VOGT AG	01015/Bz-Sn	82.005
P5-9	SOLDER LUG	PCB VERSION	VOGT AG	01015/Bz-Sn	82.005
P6-9	SOLDER LUG	PCB VERSION	VOGT AG	01015/Bz-Sn	82.005
P7-9	SOLDER LUG	PCB VERSION	VOGT AG	01015/Bz-Sn	82.005
P8-9	SOLDER LUG	PCB VERSION	VOGT AG	01015/Bz-Sn	82.005
P9-9	SOLDER LUG	PCB VERSION	VOGT AG	01015/Bz-Sn	82.005
P10-9	SOLDER LUG	PCB VERSION	VOGT AG	01015/Bz-Sn	82.005
P11-9	SOLDER LUG	PCB VERSION	VOGT AG	01015/Bz-Sn	82.005

POSITION	DESCRIPTION		MANUFACTOR	TYPE	PART NO.
P12-9	SOLDER LUG	PCB VERSION	VOGT AG	01015/Bz-Sn	82.005
P13-9	SOLDER LUG	PCB VERSION	VOGT AG	01015/Bz-Sn	82.005
P14-9	SOLDER LUG	PCB VERSION	VOGT AG	01015/Bz-Sn	82.005
P15-9	SOLDER LUG	PCB VERSION	VOGT AG	01015/Bz-Sn	82.005
P16-9	SOLDER LUG	PCB VERSION	VOGT AG	01015/Bz-Sn	82.005
P17-9	SOLDER LUG	PCB VERSION	VOGT AG	01015/Bz-Sn	82.005
P18-9	SOLDER LUG	PCB VERSION	VOGT AG	01015/Bz-Sn	82.005
P19-9	SOLDER LUG	PCB VERSION	VOGT AG	01015/Bz-Sn	82.005
P20-9	SOLDER LUG	PCB VERSION	VOGT AG	01015/Bz-Sn	82.005
P21-9	SOLDER LUG	PCB VERSION	VOGT AG	01015/Bz-Sn	82.005
P22-9	SOLDER LUG	PCB VERSION	VOGT AG	01015/Bz-Sn	82.005
P23-9	SOLDER LUG	PCB VERSION	VOGT AG	01015/Bz-Sn	82.005
P24-9	SOLDER LUG	PCB VERSION	VOGT AG	01015/Bz-Sn	82.005
P25-9	SOLDER LUG	PCB VERSION	VOGT AG	01015/Bz-Sn	82.005
P26-9	SOLDER LUG	PCB VERSION	VOGT AG	01015/Bz-Sn	82.005
P27-9	SOLDER LUG	PCB VERSION	VOGT AG	01015/Bz-Sn	82.005
P28-9	SOLDER LUG	PCB VERSION	VOGT AG	01015/Bz-Sn	82.005
P29-9	SOLDER LUG	PCB VERSION	VOGT AG	01015/Bz-Sn	82.005
P30-9	SOLDER LUG	PCB VERSION	VOGT AG	01015/Bz-Sn	82.005
P31-9	SOLDER LUG	PCB VERSION	VOGT AG	01015/Bz-Sn	82.005
P32-9	SOLDER LUG	PCB VERSION	VOGT AG	01015/Bz-Sn	82.005
P33-9	SOLDER LUG	PCB VERSION	VOGT AG	01015/Bz-Sn	82.005
P34-9	SIL SQUARE PINS	3 POLES CC=1/10"	AMP	0-826629-3 (0-826647-3)	78.323
P35-9	SOLDER LUG	PCB VERSION	VOGT AG	01015/Bz-Sn	82.005
RE1-9	RELAY	12VDC 1SH. 2A.	ORIGINAL ELECTR	OUC-SS-112D (-S-/-SH-)	21.300
RE2-9	RELAY	12VDC 1SH. 2A.	ORIGINAL ELECTR	OUC-SS-112D (-S-/-SH-)	21.300